DRAWING INDEX:

TITLE SHEET	T
SITE PLAN – TITLE SHEET	C1
SITE PLAN	C2
SITE PLAN – GRADING PLAN	C3
SITE PLAN – UTILITY PLAN	C4
SITE DETAILS	C100
DOOR / WINDOW SCHEDULES	A0.1
MAIN FLOOR PLAN	A1.0
UPPER FLOOR PLAN	A2.0
ELEVATIONS	A3.0
ELEVATIONS	A3.1
CROSS SECTIONS	A4.0
CROSS SECTIONS	A4.1
ARCHITECTURAL DETAILS	A5.0
STRUCTURAL SPECIFICATIONS	S0.1
PLAN NOTES / SCHEDULES	S0.2
FOUNDATION PLAN	S1.0
LEAN–TO FOUNDATION PLAN	S1.1
FLOOR FRAMING PLAN	S2.0
FOUNDATION DETAILS	S3.0
FRAMING DETAILS	S4.0
ELECTRICAL PLAN	E1.0
ELECTRICAL PLAN	E2.0
PLUMBING PLAN	P1.0
PLUMBING PLAN	P2.0
MECHANICAL SPECIFICATIONS	M0.1
MECHANICAL PLAN	M1.0
MECHANICAL PLAN	M2.0

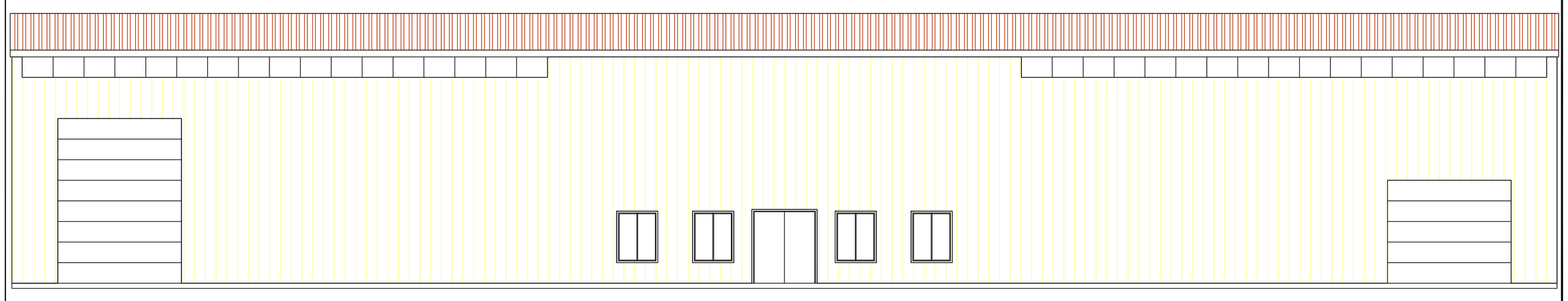

PROJECT INFORMATION:

CONSTRUCTION TYPE:	TYPE III–B
OCCUPANCY TYPE:	GROUP A–3 GROUP S–2
NUMBER OF STORIES:	ONE w/ MEZZANINE

STANDARD LOADINGS:

SNOW LOAD:	32 PSF
ROOF DEAD LOAD:	PER METAL BLDG. MFR.
ROOF LIVE LOAD:	20 PSF
FLOOR DEAD LOAD:	20 PSF
MEZZANINE FLOOR LIVE LOAD:	100 PSF
WIND LOAD:	90 MPH, EXP. C
SEISMIC DESIGN:	SDC D; SITE CLASS D; Ss=0.622; S1=0.214

BUILDING AREA/HEIGHT:

MAIN FLOOR AREA:	12750 SQ. FT.
MEZZANINE FLOOR AREA:	2918 SQ. FT.
TOTAL AREA:	15668 SQ. FT.
BUILDING EAVE HEIGHT:	22'–0"
BUILDING OVERALL HEIGHT:	26'–2 1/2"

OCCUPANT LOAD (IBC TABLE 1004.1.1):

MAIN FLOOR ASSEMBLY AREA: 813

(MULTI–PURPOSE ROOMS 4483 SQ. FT. EA. SIDE (TOTAL OF 8966 SQ. FT) / 15 SQ. FT. / OCC + CONFERENCE ROOMS 1501 SQ. FT. / 7 SQ FT. / OCC + STORAGE AREA 430 SQ. FT. / 300 / OCC + KITCHEN AREA 276 SQ. FT. / 200 / OCC)

MAIN FLOOR LOBBY AREA: 37

(ASSEMBLY AREA 552 SQ. FT. / 15 / OCC)

MAIN FLOOR STORAGE AREA: 2

(STORAGE AREA 430 SQ. FT. / 300 / OCC)

MAIN FLOOR KITCHEN AREA: 2

(KITCHEN AREA 276 SQ. FT. / 200 / OCC)

MEZZANINE STORAGE AREA: 10

(STORAGE AREA 2912 SQ. FT. / 300 SQ. FT. / OCC)

TOTAL OCCUPANT LOAD: 864

CODE REQUIREMENTS:

*BUILDING CONSTRUCTED AS MIXED USE, NON–SEPARATED OCCUPANCY
*3 SEPARATE FIRE AREAS SEPARATED BY 2–HR FIRE WALLS

DEFERRED SUBMITTALS:

- METAL BUILDING PLANS AND CALCULATIONS
- SHEET ROCK INSTALLATION DETAIL
- LIGHTING INSTALLATION DETAILS

SPECIAL INSPECTION REQUIREMENTS:

SPECIAL INSPECTION OF ALL EPOXY APPLICATIONS REQ'D

ALL CONSTRUCTION SHALL COMPLY TO THE FOLLOWING CODES:

2009 INTERNATIONAL PLUMBING CODE
2009 INTERNATIONAL MECHANICAL CODE
2009 INTERNATIONAL BUILDING CODE
2009 INTERNATIONAL FIRE CODE
2009 INTERNATIONAL ENERGY CONSERVATION CODE
2008 NATIONAL ELECTRIC CODE
2003 ANSI 117.1

DATE:	REVISION:
5/16/11	INITIAL DESIGN
	OWNER REVIEW
	CITY APPROVAL
	FOR CONSTRUCTION

KC FAIRGROUNDS BUILDING
TITLE SHEET
KANE COUNTY, UTAH
SCALE= NTS
REDUCE SCALE BY ½ FOR 11x17 DRAWINGS

TC ENGINEERING, PC
A "DESIGN-BUILD" FIRM
EXCELLENCE...ON TIME!
DANIEL W. THEBEAU, P.E.
P.O. BOX 55, KANAB, UTAH 84741
(435)644-2031 (888)644-2031
(435)689-0155

DATE: MAY. 2011
FILE: KC
SHEET: T
DRAWN BY: RMD

WINDOW SCHEDULE					
	SIZE				
MARK	WIDTH	HEIGHT	Style	Header Ht.	Remarks
11	4'-0"	5'-0"	Slider	7'-0"	
12	4'-0"	5'-0"	Slider	7'-0"	
13	4'-0"	5'-0"	Slider	7'-0"	
14	4'-0"	5'-0"	Slider	7'-0"	
15	4'-0"	5'-0"	Slider	7'-0"	
16	4'-0"	5'-0"	Slider	7'-0"	
17	4'-0"	5'-0"	Slider	7'-0"	
18	4'-0"	5'-0"	Slider	7'-0"	

DOOR AND FRAME SCHEDULE								
		DOOR						
		SIZE						
MARK	Style	WD	HGT	THK	Swing	FR	Notes	WALL SIZE
101	Hinged - Double - Exterior	PR 3'-0"	7'-0"	1 3/4"	Right	--	--	8"
102	Overhead - Garage Door	12'-0"	16'-0"	1 3/4"	Right	--	ROLLUP - AUTO	8"
103	Hinged - Double - Exterior	PR 3'-0"	7'-0"	1 3/4"	Left	--	--	8"
104	Overhead - Garage Door	12'-0"	10'-0"	1 3/4"	Right	--	ROLLUP - AUTO	8"
105	Hinged - Double - Exterior	PR 3'-0"	7'-0"	1 3/4"	Left	--	--	8"
106	Hinged - Single	3'-0"	6'-8"	1 3/8"	Left	1 1/2 HR	SELF CLOSING	5 1/2"
107	Hinged - Double	PR 3'-0"	6'-8"	1 3/8"	Left	1 1/2 HR	SELF CLOSING	5 1/2"
108	Hinged - Single	3'-0"	6'-8"	1 3/8"	Left	1 1/2 HR	SELF CLOSING	5 1/2"
109	Hinged - Single	3'-0"	6'-8"	1 3/8"	Left	1 1/2 HR	SELF CLOSING	5 1/2"
110	Hinged - Single	3'-0"	6'-8"	1 3/8"	Right	1 1/2 HR	SELF CLOSING	5 1/2"
111	Hinged - Single	3'-0"	6'-8"	1 3/8"	Right	1 1/2 HR	SELF CLOSING	5 1/2"
112	Hinged - Single	3'-0"	6'-8"	1 3/8"	Right	1 1/2 HR	SELF CLOSING	5 1/2"
113	Hinged - Single	3'-0"	6'-8"	1 3/8"	Right	1 1/2 HR	SELF CLOSING	5 1/2"
114	Hinged - Single	3'-0"	6'-8"	1 3/8"	Right	1 1/2 HR	SELF CLOSING	5 1/2"
115	Hinged - Single	3'-0"	6'-8"	1 3/8"	Right	--	--	5 1/2"
116	Hinged - Single	3'-0"	6'-8"	1 3/8"	Left	--	--	5 1/2"
117	Hinged - Single	3'-0"	6'-8"	1 3/8"	Right	--	--	5 1/2"
118	Hinged - Double	PR 2'-10"	6'-8"	1 3/8"	Right	--	--	5 1/2"
119	Hinged - Double	PR 2'-10"	6'-8"	1 3/8"	Left	--	--	5 1/2"
120	Hinged - Single	3'-0"	6'-8"	1 3/8"	Left	--	--	5 1/2"
121	Hinged - Single	3'-0"	6'-8"	1 3/8"	Right	--	--	5 1/2"
122	Hinged - Single	3'-0"	6'-8"	1 3/8"	Right	--	--	5 1/2"

SC1 MAIN FLOOR DOOR/WINDOW SCHEDULES
SCALE: NTS

WINDOW SCHEDULE					
	SIZE				
MARK	WIDTH	HEIGHT	Style	Header Ht.	Remarks
21	4'-0"	5'-0"	Slider	7'-0"	
22	4'-0"	5'-0"	Slider	7'-0"	
23	4'-0"	5'-0"	Slider	7'-0"	
24	4'-0"	5'-0"	Slider	7'-0"	

DOOR AND FRAME SCHEDULE								
		DOOR						
		SIZE						
MARK	Style	WD	HGT	THK	Swing	FR	Notes	WALL SIZE
201	Hinged - Single	3'-0"	6'-8"	1 3/8"	Left	--	--	5 1/2"
202	Hinged - Single	3'-0"	6'-8"	1 3/8"	Right	--	--	5 1/2"

SC2 UPPER FLOOR DOOR/WINDOW SCHEDULES
SCALE: NTS

DATE:	REVISION:
5/16/11	INITIAL DESIGN
	OWNER REVIEW
	CITY APPROVAL
	FOR CONSTRUCTION

KC FAIRGROUNDS BUILDING
DOOR/WINDOW SCHEDULES
KANE COUNTY, UTAH
SCALE= NTS
REDUCE SCALE BY ½ FOR 11x17 DRAWINGS

TC ENGINEERING, PC
A "DESIGN-BUILD" FIRM
EXCELLENCE...ON TIME!
DANIEL W. THEBEAU, P.E.
P.O. BOX 55, KANAB, UTAH 84741
(435)644-2031 (888)644-2031
(435)689-0155

DATE: MAY. 2011
FILE: KC
SHEET: A0.1
DRAWN BY: RMD

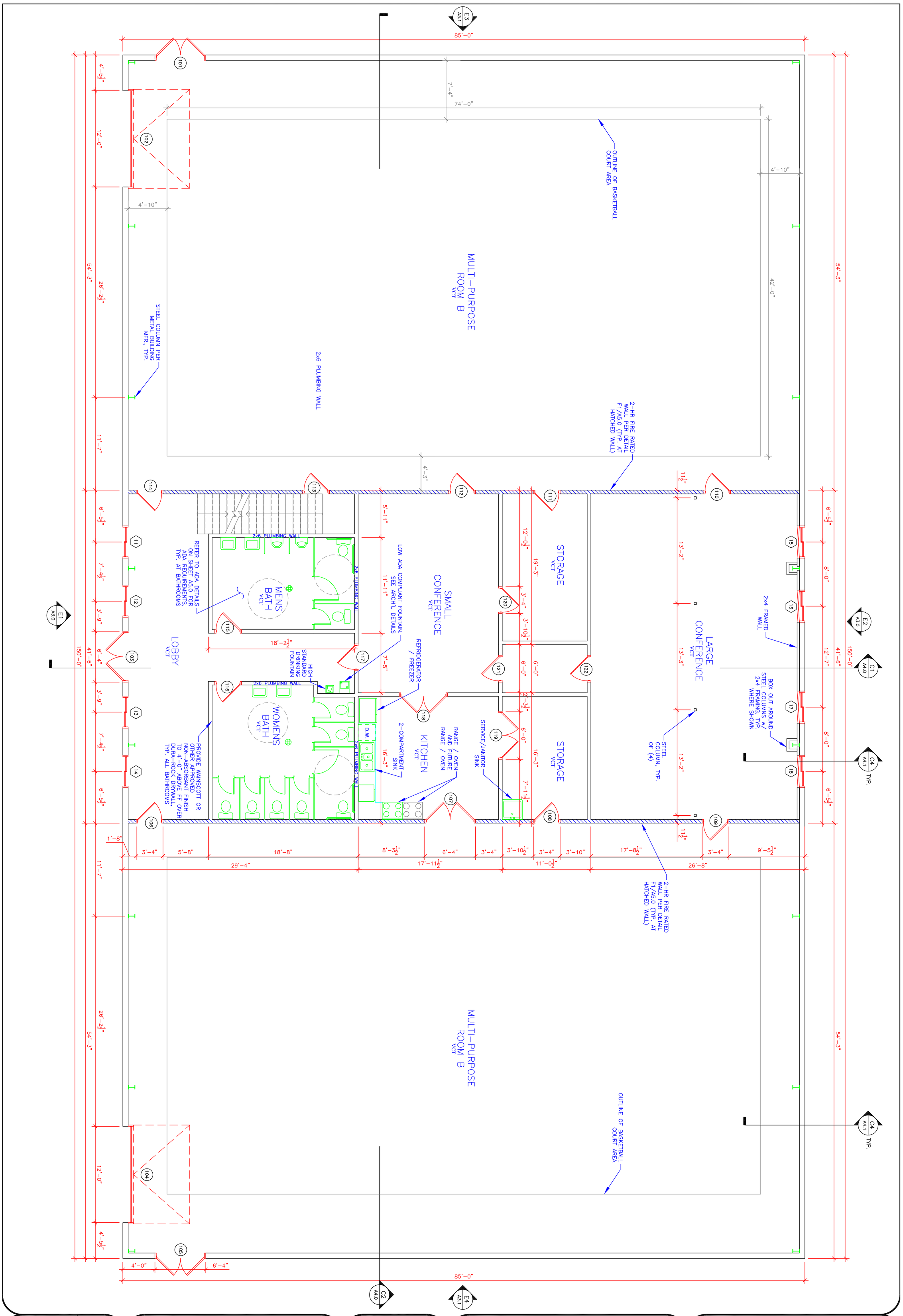

DATE:	FILE:
MAY. 2011	KC
SHEET:	DRAWN BY:
A1.0	RMD

TC ENGINEERING, PC
A "DESIGN-BUILD" FIRM
EXCELLENCE....ON TIME!
DANIEL W. THEBEAU, P.E.
P.O. BOX 55, KANAB, UTAH 84741
(435)644-2031 (888)644-2031
(435)689-0155

KC FAIRGROUNDS BUILDING
MAIN FLOOR PLAN
KANE COUNTY, UTAH

SCALE= 3/16"=1'-0"

REDUCE SCALE BY ½ FOR 11x17 DRAWINGS

DATE:	REVISION:
5/16/11	INITIAL DESIGN
	OWNER REVIEW
	CITY APPROVAL
	FOR CONSTRUCTION

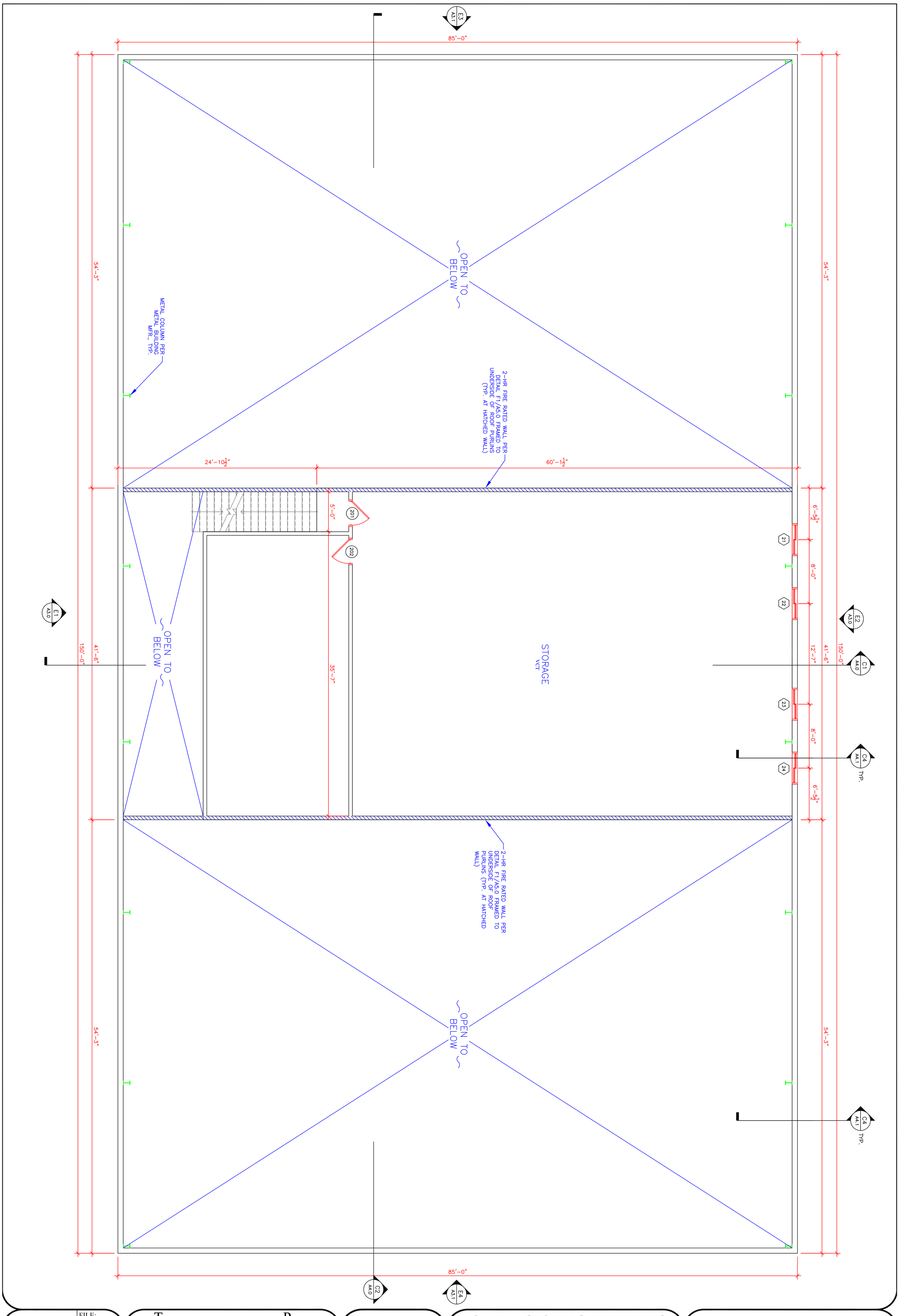

DATE:	FILE:
MAY. 2011	KC
SHEET:	DRAWN BY:
A2.0	RMD

TC ENGINEERING, PC
A "DESIGN-BUILD" FIRM
EXCELLENCE....ON TIME!
DANIEL W. THEBEAU, P.E.
P.O. BOX 55, KANAB, UTAH 84741
(435)644-2031 (888)644-2031
(435)689-0155

KC FAIRGROUNDS BUILDING
UPPER FLOOR PLAN
KANE COUNTY, UTAH

SCALE= 3/16"=1'-0"

REDUCE SCALE BY ½ FOR 11x17 DRAWINGS

DATE:	REVISION:
5/16/11	INITIAL DESIGN
	OWNER REVIEW
	CITY APPROVAL
	FOR CONSTRUCTION

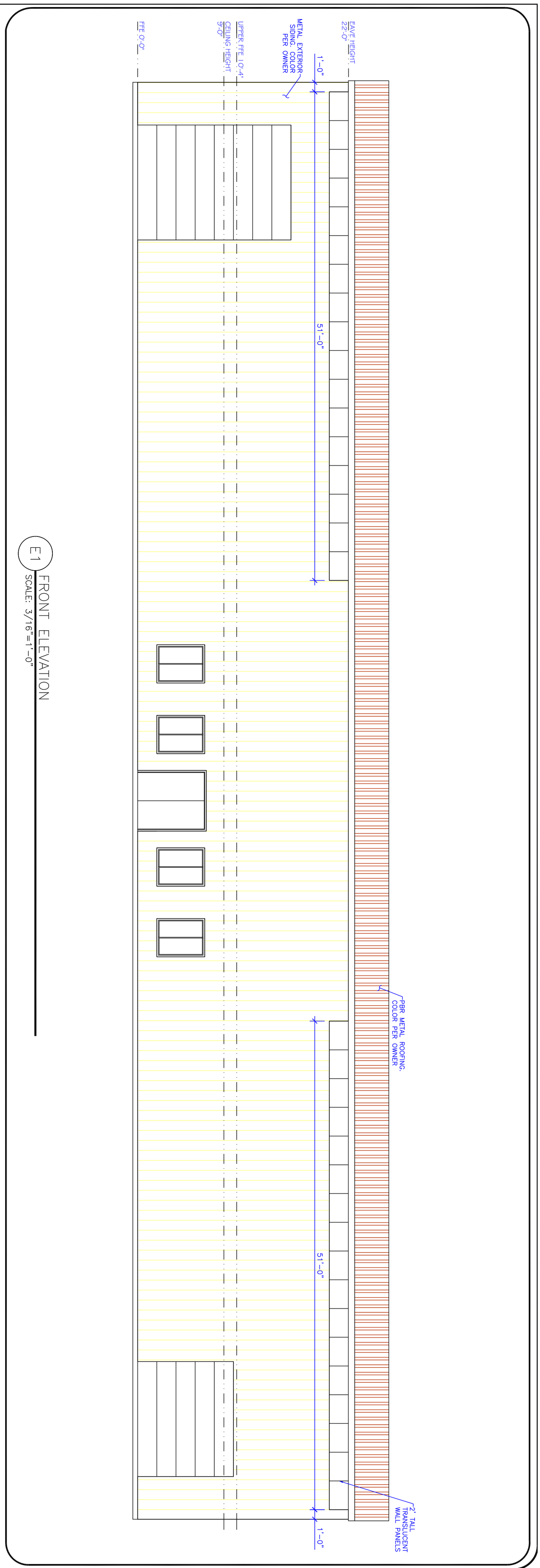

E1 FRONT ELEVATION
SCALE: 3/16"=1'-0"

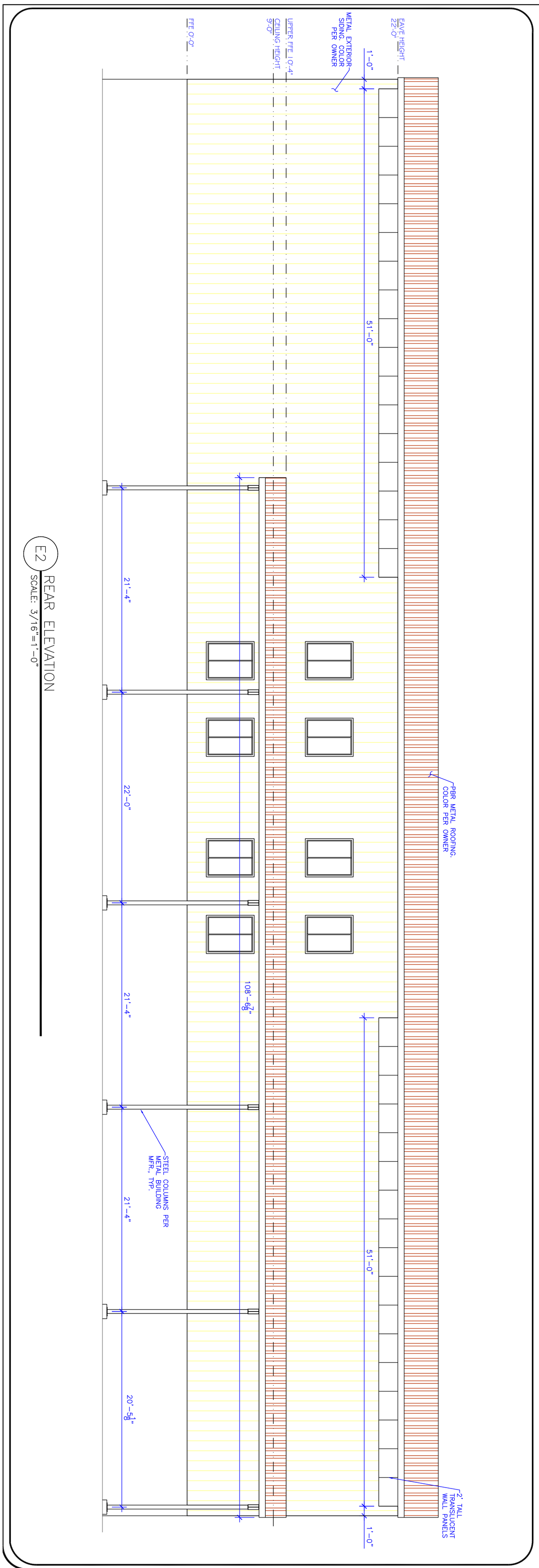

E2 REAR ELEVATION
SCALE: 3/16"=1'-0"

DATE:	FILE:
MAY. 2011	KC
SHEET:	DRAWN BY:
A3.0	RMD

TC ENGINEERING, PC
A "DESIGN-BUILD" FIRM
EXCELLENCE....ON TIME!
DANIEL W. THEBEAU, P.E.
P.O. BOX 55, KANAB, UTAH 84741
(435)644-2031 (888)644-2031
(435)689-0155

KC FAIRGROUNDS BUILDING
ELEVATIONS
KANE COUNTY, UTAH

SCALE= AS NOTED
REDUCE SCALE BY ½ FOR 11x17 DRAWINGS

DATE:	REVISION:
5/16/11	INITIAL DESIGN
	OWNER REVIEW
	CITY APPROVAL
	FOR CONSTRUCTION

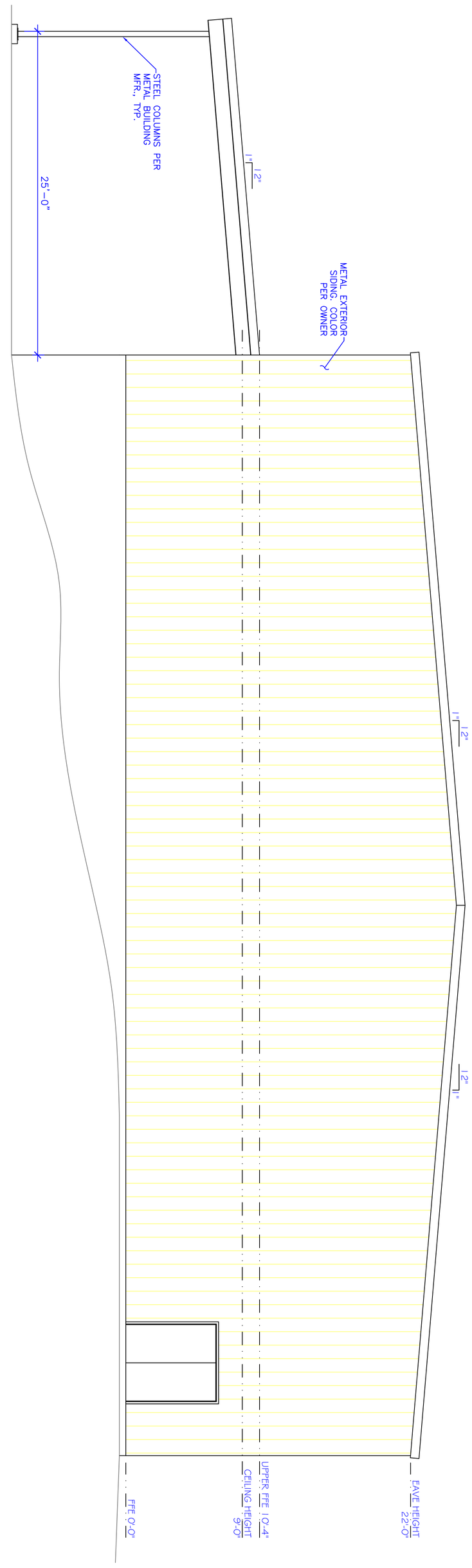

E3 LEFT ELEVATION
SCALE: 3/16"=1'-0"

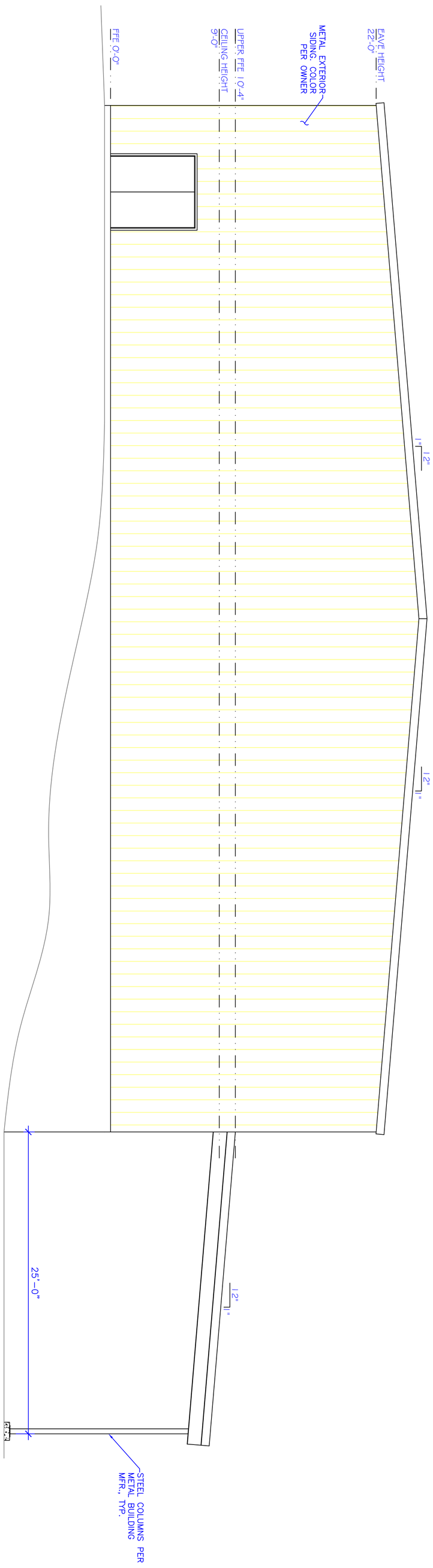

E4 RIGHT ELEVATION
SCALE: 3/16"=1'-0"

DATE:	FILE:
MAY. 2011	KC
SHEET:	DRAWN BY:
A3.1	RMD

TC ENGINEERING, PC
A "DESIGN-BUILD" FIRM
EXCELLENCE....ON TIME!
DANIEL W. THEBEAU, P.E.
P.O. BOX 55, KANAB, UTAH 84741
(435)644-2031 (888)644-2031
(435)689-0155

KC FAIRGROUNDS BUILDING
ELEVATIONS
KANE COUNTY, UTAH

SCALE= AS NOTED
REDUCE SCALE BY ½ FOR 11x17 DRAWINGS

DATE:	REVISION:
5/16/11	INITIAL DESIGN
	OWNER REVIEW
	CITY APPROVAL
	FOR CONSTRUCTION

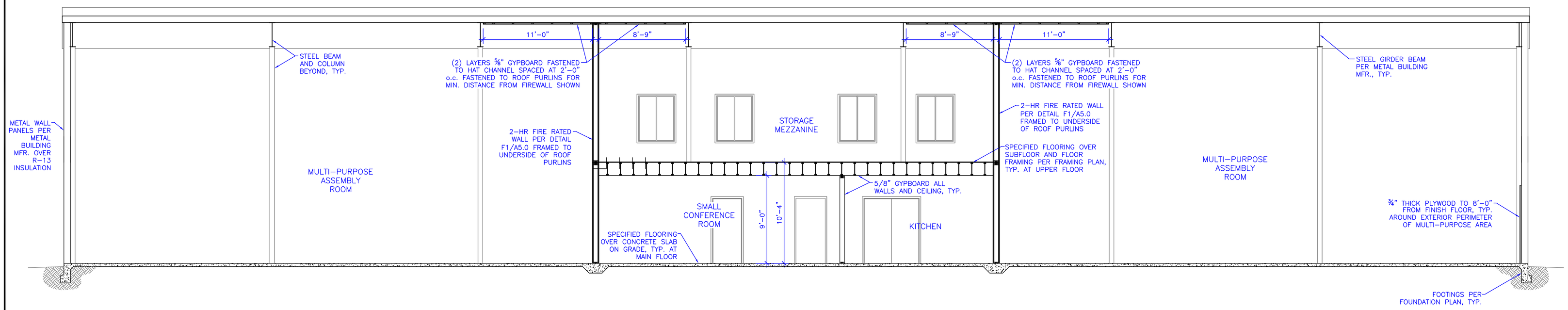

C2 CROSS SECTION
SCALE: 3/16"=1'-0"

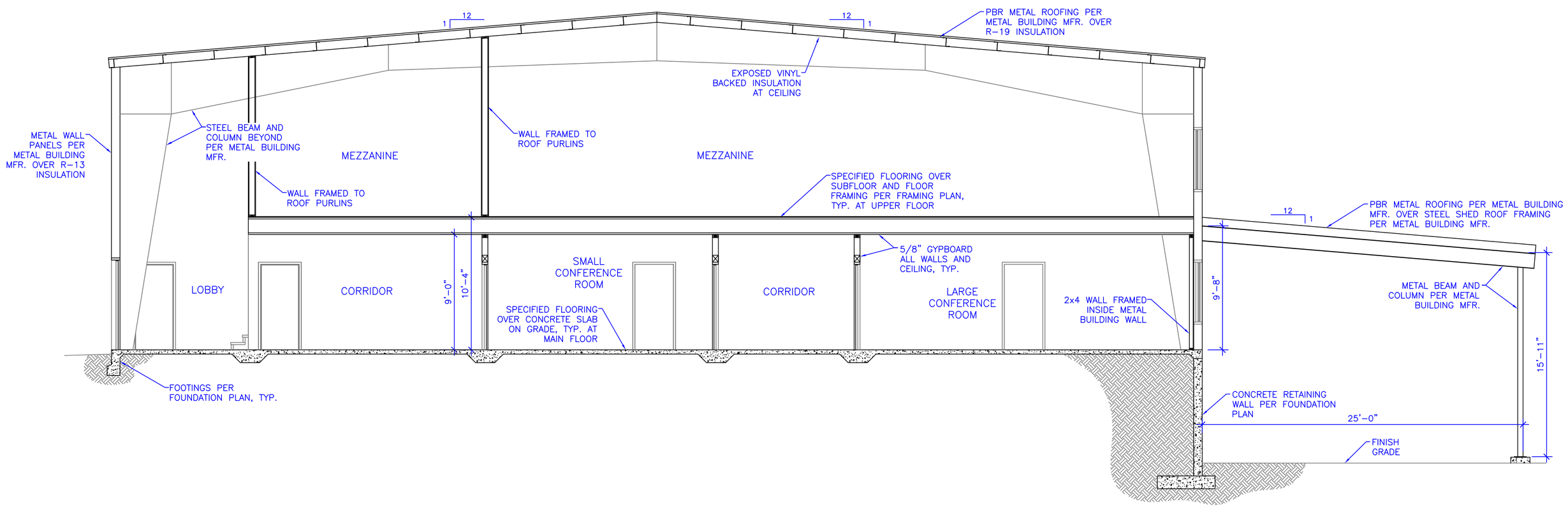

C1 CROSS SECTION
SCALE: 3/16"=1'-0"

DATE:	REVISION:
5/16/11	INITIAL DESIGN
	OWNER REVIEW
	CITY APPROVAL
	FOR CONSTRUCTION

KC FAIRGROUNDS BUILDING
CROSS SECTIONS
KANE COUNTY, UTAH

SCALE= AS NOTED
REDUCE SCALE BY ½ FOR 11x17 DRAWINGS

TC ENGINEERING, PC
A "DESIGN-BUILD" FIRM
EXCELLENCE...ON TIME!
DANIEL W. THEBEAU, P.E.
P.O. BOX 55, KANAB, UTAH 84741
(435)644-2031 (888)644-2031
(435)689-0155

DATE:	FILE:
MAY. 2011	KC
SHEET:	DRAWN BY:
A4.0	RMD

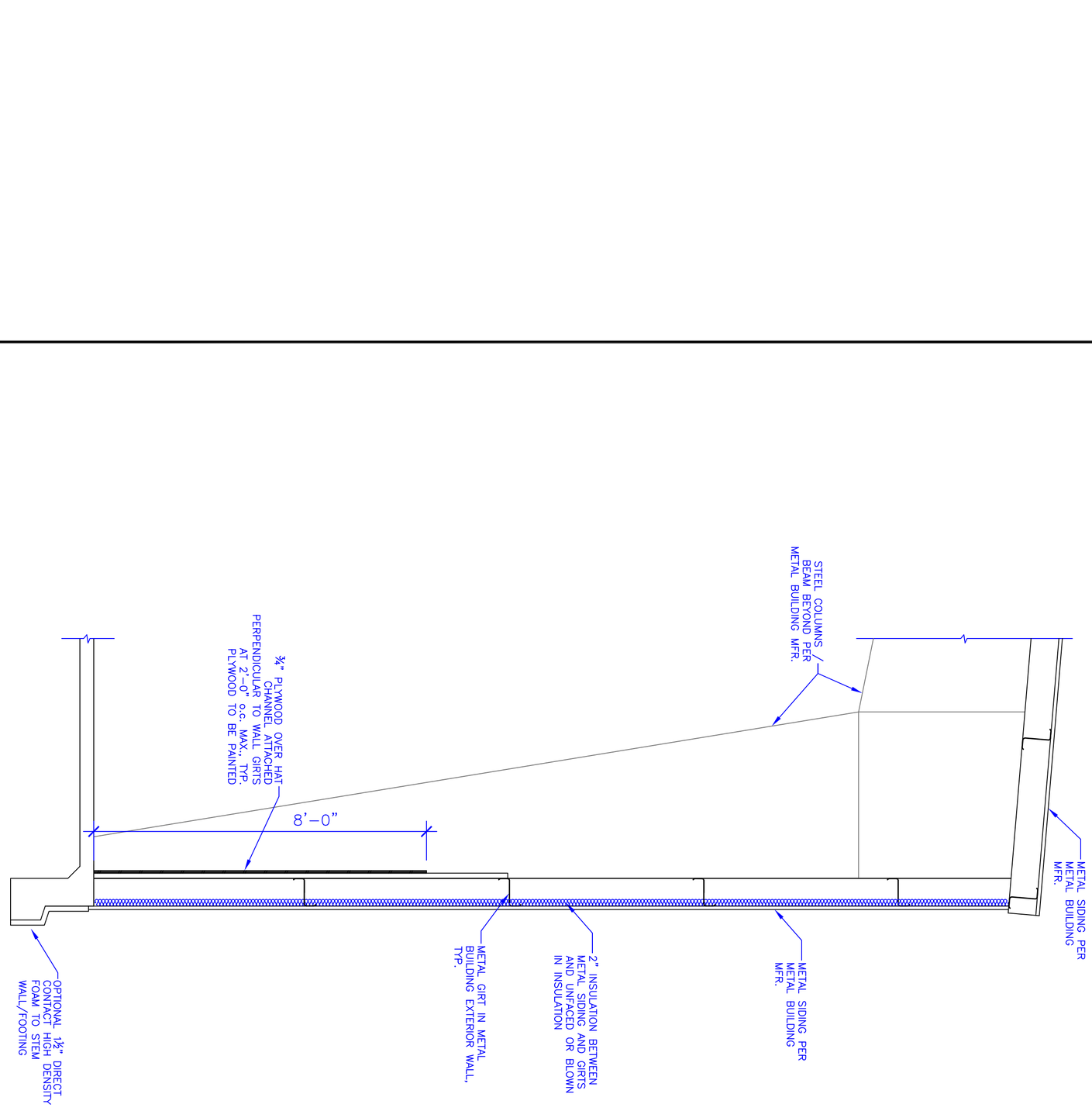

C4 CROSS SECTION
SCALE: 1/2"=1'-0"

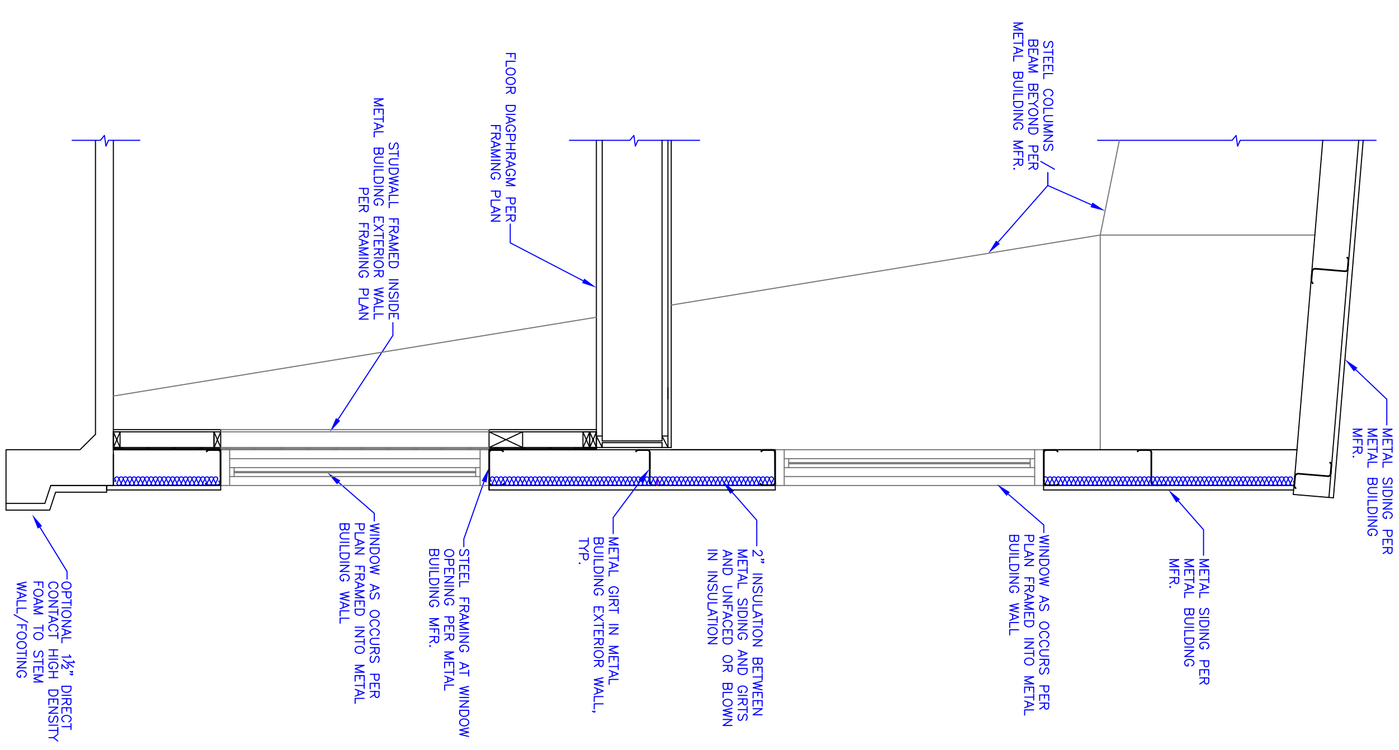

C3 CROSS SECTION
SCALE: 1/2"=1'-0"

DATE:	FILE:
MAY. 2011	KC
SHEET:	DRAWN BY:
A4.1	RMD

TC ENGINEERING, PC
A "DESIGN-BUILD" FIRM
EXCELLENCE....ON TIME!
DANIEL W. THEBEAU, P.E.
P.O. BOX 55, KANAB, UTAH 84741
(435)644-2031 (888)644-2031
(435)689-0155

KC FAIRGROUNDS BUILDING
CROSS SECTIONS
KANE COUNTY, UTAH

SCALE= AS NOTED
REDUCE SCALE BY ½ FOR 11x17 DRAWINGS

DATE:	REVISION:
5/16/11	INITIAL DESIGN
	OWNER REVIEW
	CITY APPROVAL
	FOR CONSTRUCTION

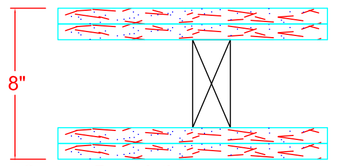

System Performance
2 HR Fire
UL Design No. U301

System Description
Wood Stud Partition (Load Bearing)
5/8" SHEETROCK brand gypsum panel, FIRECODE CORE, or 5/8" Fiberock Brand Panels
5/8" SHEETROCK brand gypsum panel, FIRECODE CORE, or 5/8" Fiberock Brand Panels
2" x 6" wood stud 16" o.c.
5/8" SHEETROCK brand gypsum panel, FIRECODE CORE, or 5/8" Fiberock Brand Panels
5/8" SHEETROCK brand gypsum panel, FIRECODE CORE, or 5/8" Fiberock Brand Panels
Optional SHEETROCK brand gypsum panel, water-resistant, FIRECODE core
Estimated weight - 12 lb/sf

F1 2-HR INTERIOR WALL DETAIL
NTS

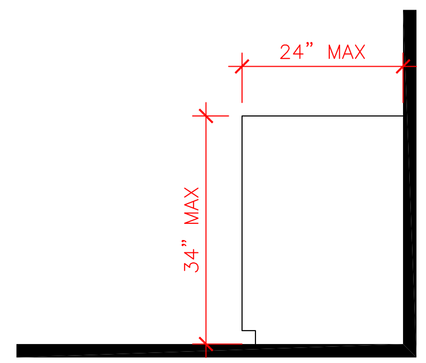

D9 KITCHEN CABINET DETAILS
NTS

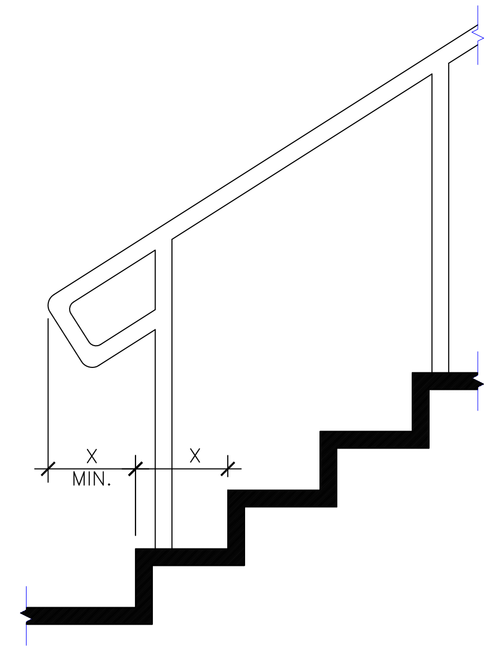

D6 TYP. ADA EXTERIOR HANDRAIL EXTENSION DETAIL
NTS

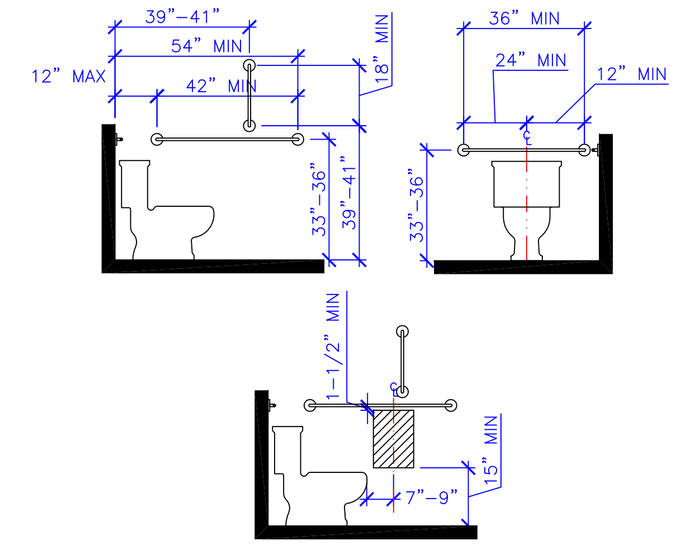

*TOILET SHALL BE EQUIPPED w/ SEAT OF SMOOTH, NON-ABSORBANT MATERIAL. TOILET SEAT SHALL BE OF THE HINGED OPEN-FRONT TYPE. INTEGRAL SEATS SHALL BE OF THE SAME MATERIAL AS THE FIXTURE. WATER CLOSET SEATS SHALL BE SIZED FOR THE WATER CLOSET BOWL TYPE.

D3 TYP. BATHROOM TOILET DETAIL
NTS

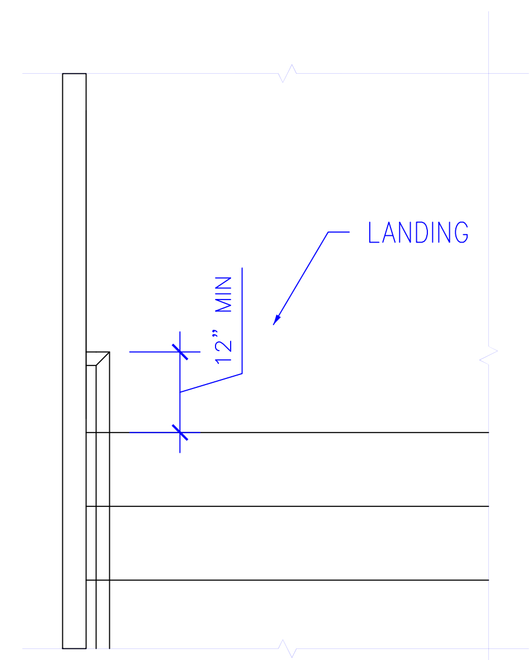

D8 TYP. HANDRAIL ENDING EXTENSION – PLAN VIEW
NTS

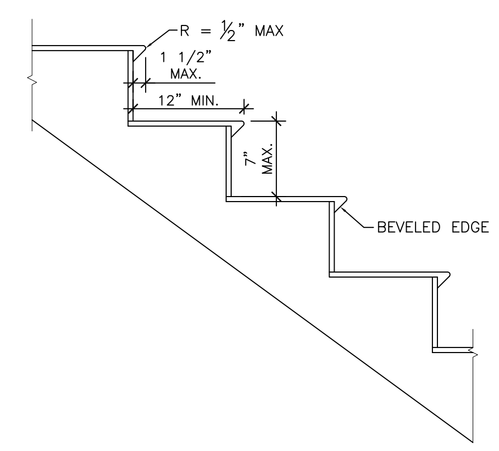

A. PROVIDE DARK TO LIGHT VISUAL CONTRAST BETWEEN LEADING 2" OF TREAD AND REMAINDER OF TREAD

D5 TYP. ADA STAIR TREAD AND RISER DETAIL
NTS

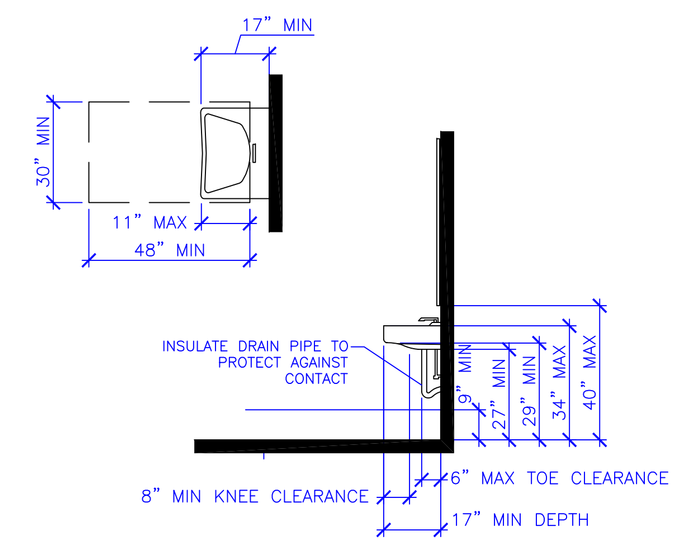

*LAVATORY FAUCET AND SOAP DISPENSER CONTROLS SHALL HAVE A MAXIMUM REACH DEPTH OF 11"

D2 TYP. ADA LAVATORY DETAIL
NTS

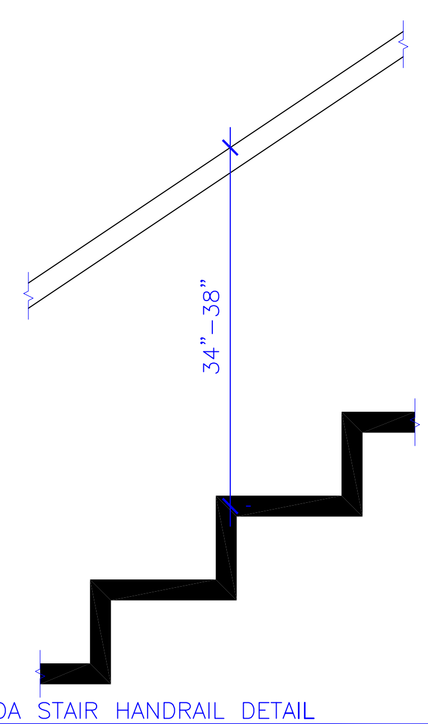

D10 TYP. ADA STAIR HANDRAIL DETAIL
NTS

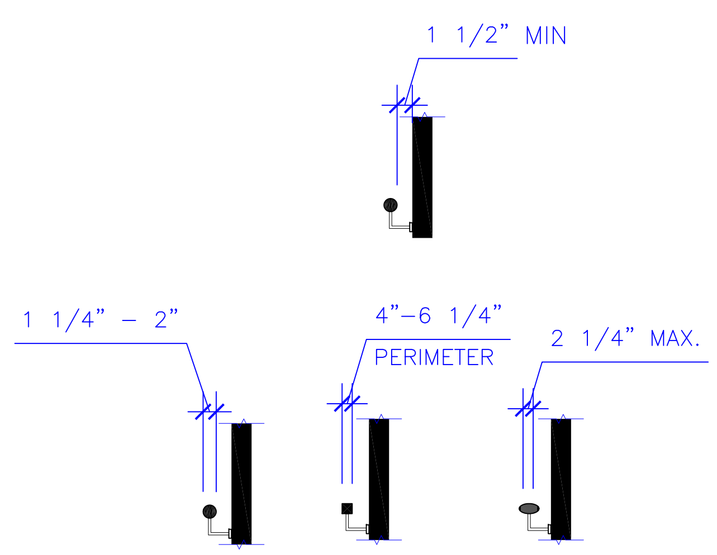

D7 TYP. ADA STAIR HANDRAIL DETAIL
NTS

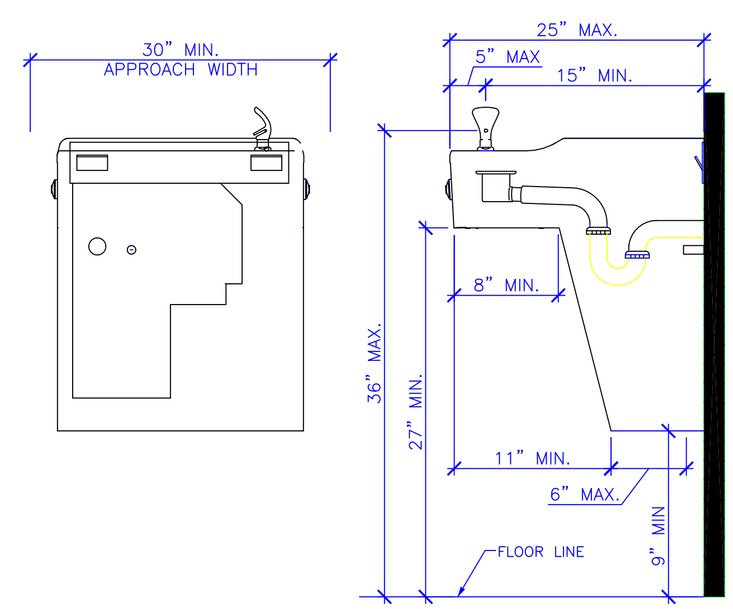

D4 TYP. ADA DRINKING FOUNTAIN DETAIL
NTS

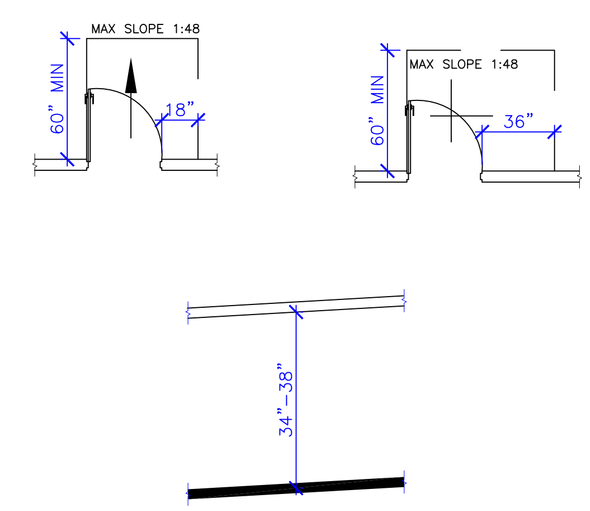

D1 TYP. DOOR APPROACH DETAILS
NTS

DATE:	REVISION:
5/16/11	INITIAL DESIGN
	OWNER REVIEW
	CITY APPROVAL
	FOR CONSTRUCTION

KC FAIRGROUNDS BUILDING
ARCHITECTURAL DETAILS
KANE COUNTY, UTAH
SCALE= AS NOTED
REDUCE SCALE BY ½ FOR 11x17 DRAWINGS

TC ENGINEERING, PC
A "DESIGN-BUILD" FIRM
EXCELLENCE...ON TIME!
DANIEL W. THEBEAU, P.E.
P.O. BOX 55, KANAB, UTAH 84741
(435)644-2031 (888)644-2031
(435)689-0155

DATE:	FILE:	DRAWN BY:
MAY. 2011	KC	RMD
SHEET:		
A5.0		

GENERAL NOTES

1. DESIGN SNOW LOADS:
   ROOF = 32 PSF
   IMPORTANCE FACTOR – 1.0

   BASIS FOR WIND DESIGN:
   2009 INTERNATIONAL BUILDING CODE / ACSE 7–05
   WIND = 90 MPH BASIC WIND SPEED, EXPOSURE C.
   EXPOSURE CATEGORY – C
   WIND USE GROUP – III
   IMPORTANCE FACTOR – 1.0

   SEISMIC – SITE CLASS D
   SEISMIC DESIGN CATEGORY D
   Ss = 0.622
   S1 = 0.214

   LATERAL FORCE RESISTING SYSTEM:
   PRE–FABRICATED STEEL MOMENT/BRACED FRAME

2. THESE STRUCTURAL NOTES DO NOT SUPERSEDE THE PLAN NOTES. CONSULT THE PLAN NOTES SPECIFIC TO FOUNDATION AND FRAMING FOR ADDITIONAL REQUIREMENTS IN EACH SECTION. IF CONFLICT BETWEEN NOTES AND SPECIFICATIONS OCCURS, THE MOST STRINGENT REQUIREMENT GOVERNS. NOTES AND DETAILS ON DRAWINGS TAKE PRECEDENCE OVER GENERAL NOTES, TYPICAL DETAILS, AND SPECIFICATIONS.

3. THE CONTRACTOR SHALL VERIFY ALL DIMENSIONS PRIOR TO STARTING CONSTRUCTION. DURING CONSTRUCTION, THE CONTRACTOR SHALL FIELD VERIFY ALL DIMENSIONS PRIOR TO FABRICATION OR CONSTRUCTION IN ANY AREA. THE ARCHITECT SHALL BE NOTIFIED OF ANY DISCREPANCIES, OMISSIONS, OR INCONSISTENCIES. IN CASE OF CONFLICT, FOLLOW THE MOST STRINGENT REQUIREMENTS AS DIRECTED BY THE ARCHITECT AND ENGINEER WITHOUT ADDITIONAL COST TO THE OWNER. DO NOT SCALE DRAWINGS!

4. ALL WORK SHALL CONFORM TO THE MINIMUM STANDARDS OF THE INTERNATIONAL BUILDING CODE, ANY OTHER REGULATING AGENCIES WHICH HAVE AUTHORITY OVER ANY PORTION OF THE WORK, AND THE CODES AND STANDARDS LISTED IN THESE NOTES AND SPECIFICATIONS. ALL SPECIFICATIONS NOTED SHALL BE THE LATEST APPROVED REVISION OR EDITION. THE GENERAL CONTRACTOR SHALL REVIEW AND APPROVE ALL SHOP DRAWINGS PRIOR TO SUBMITTING THEM TO THE ARCHITECT. A REVIEWED COPY OF ALL SHOP DRAWINGS SHALL BE KEPT AT THE CONSTRUCTION SITE FOR REFERENCE. THE SHOP DRAWING REVIEW SHALL NOT RELIEVE THE GENERAL CONTRACTOR OF ANY RESPONSIBILITY FOR COMPLETION OF THE PROJECT ACCORDING TO THE CONTRACT DOCUMENTS.

5. THE CONTRACTOR SHALL INVESTIGATE THE SITE DURING CLEARING, EXCAVATION OR OTHER EARTH WORK OPERATIONS FOR FILLED EXCAVATIONS, BURIED STRUCTURES OR UNNATURAL SOIL CONDITIONS.

6. STRUCTURAL DRAWINGS AND SPECIFICATIONS REPRESENT THE FINISHED STRUCTURE, NOT THE METHOD OF CONSTRUCTION. THE CONTRACTOR SHALL BE RESPONSIBLE FOR ALL MEASURES NECESSARY TO PROTECT THE STRUCTURE DURING CONSTRUCTION. THESE MEASURES INCLUDE, BUT ARE NOT LIMITED TO: BRACING, SHORING, ETC. SHORING AND BRACING SHALL REMAIN IN PLACE UNTIL ALL PERMANENT MEMBERS ARE IN PLACE AND CONNECTIONS COMPLETE. OBSERVATION VISITS TO THE SITE BY THE ENGINEER OR HIS REPRESENTATIVE SHALL NOT INCLUDE INSPECTION OF THESE ITEMS. CONSTRUCTION MATERIALS SHALL BE SPREAD OUT IF PLACED ON FRAMED FLOORS OR ROOF. LOADS SHALL NOT EXCEED THE DESIGN LIVE LOAD PER SQUARE FOOT. PROVIDE ADEQUATE SHORING OR BRACING WHERE STRUCTURE HAS NOT ATTAINED DESIGN STRENGTH.

7. THE STRUCTURAL DRAWINGS ARE A PORTION OF THE COMPLETE SET OF CONSTRUCTION DOCUMENTS AND ARE NOT INTENDED TO CONVEY ABSOLUTELY ALL INFORMATION RELATED TO THE PRIMARY STRUCTURE AS AN INDEPENDENT SET OF DOCUMENTS. IT SHALL BE THE RESPONSIBILITY OF THE GENERAL CONTRACTOR TO COORDINATE WITH ALL TRADES, ANY AND ALL, ITEMS THAT ARE TO BE INTEGRATED INTO THE STRUCTURAL SYSTEM.

8. SEE ARCH'L DRAWINGS FOR THE FOLLOWING: (UNLESS NOTED SPECIFICALLY ON STRUCTURAL DRAWINGS)
   – SIZE AND LOCATION OF DOOR, WINDOW, FLOOR, AND ROOF OPENINGS
   – SIZE AND LOCATION OF ALL INTERIOR AND EXTERIOR NON–BEARING PARTITIONS
   – FLOOR AND ROOF FINISHES
   – STAIR FRAMING AND DETAILS (EXCEPT AS SHOWN).
   – DIMENSIONS NOT SHOWN ON STRUCTURAL DRAWINGS

9. SEE MECHANICAL AND ELECTRICAL DRAWINGS FOR THE FOLLOWING: (UNLESS SHOWN OR NOTED)
   – PIPE RUNS, SLEEVES, TRENCHES, HANGERS, WALL AND SLAB OPENINGS, ETC.
   – ELECTRICAL CONDUITS, BOXES, AND OUTLETS IN WALLS AND SLABS.
   – CONCRETE INSERT REQUIREMENTS FOR MECHANICAL AND ELECTRICAL.
   – SIZE AND LOCATION OF MACHINE OR EQUIP. BASES, ANCHOR BOLT REQUIREMENTS, ETC.

10. OPENINGS LARGER THAN 6 IN. SHALL NOT BE PLACED IN SLABS, DECKS, WALLS, ETC., UNLESS SPECIFICALLY DETAILED ON THE STRUCTURAL DRAWINGS. NOTIFY THE STRUCTURAL ENGINEER WHEN DRAWINGS BY OTHERS SHOW ABOVE CONDITIONS LOCATED IN STRUCTURAL MEMBERS.

11. OBSERVATION VISITS BY THE ENGINEER OR HIS REPRESENTATIVE SHALL NEITHER BE CONSTRUED AS INSPECTION NOR APPROVAL OF CONSTRUCTION.

FOUNDATIONS

1. FOUNDATION AND FOOTINGS ARE DESIGNED BASED ON A BEARING PRESSURE OF 1500 PSF AS PER 2009 IBC RECOMMENDATIONS

2. THE CONTRACTOR SHALL PROVIDE FOR PROPER DE–WATERING OF ANY AND ALL EXCAVATIONS IF REQUIRED.

3. THE CONTRACTOR SHALL PROVIDE FOR THE DESIGN AND INSTALLATION OF ALL CRIBBING, SHEATHING, AND SHORING REQUIRED TO SAFELY AND ADEQUATELY RETAIN ANY EXCAVATIONS.

4. ALL RETAINING WALLS, BUILDING WALLS, PITS, ETC. MUST HAVE ATTAINED THEIR DESIGN STRENGTH AND/OR SUPPORT PRIOR TO BACKFILLING. EXCEPTION – IF BRACING IS TO BE USED TO SUPPORT WALLS AND ETC. FOR EARLY BACKFILLING, CONTRACTOR IS RESPONSIBLE FOR DESIGN, PERMITS AND INSTALLATION OF SUCH BRACING.

5. GRADING SHALL ALLOW FOR POSITIVE DRAINAGE (2 PERCENT MINIMUM) AWAY FROM THE BUILDING, OTHER FOOTINGS AND FOUNDATIONS, DRIVES AND SIDEWALKS. ALL DOWN SPOUTS SHALL DRAIN ONTO 3 FOOT LONG SPLASH BLOCKS SLOPING AWAY FROM FOUNDATIONS.

6. EXCESSIVE WETTING OR DRYING OF THE FOUNDATION EXCAVATION AND THE FLOOR SLAB AREAS SHOULD BE AVOIDED DURING CONSTRUCTION.

7. ALL FILL SUPPORTING CONCRETE SLABS, FOOTINGS, OR ETC. SHALL BE MOISTENED AND COMPACTED TO AT LEAST 95 PERCENT OF THE MAXIMUM DRY DENSITY AS DETERMINED BY ASTM D–1557 (MODIFIED PROCTOR). ALL OTHER FILL SHALL BE COMPACTED TO A MINIMUM RELATIVE COMPACTION OF NINETY (90) PERCENT OF MAXIMUM DRY DENSITY. COMPACTION TESTING SHALL BE PERFORMED BY AN APPROVED TESTING AGENCY AND THE RESULTS SUBMITTED TO THE STRUCTURAL ENGINEER. SUFFICIENT FIELD DENSITY TESTS SHALL BE PERFORMED TO CERTIFY BUILDING PADS ARE CONFORMING TO THE SPECIFICATIONS.

7. FOOTINGS SHALL BE PLACED ON A MINIMUM OF 18" OF STRUCTURAL FILL COMPACTED TO 95% OF MAXIMUM DRY DENSITY AS DETERMINED BY MODIFIED PROCTOR ASTM D–1557.

WOOD CONSTRUCTION

1. ALL PHASES OF WORK PERTAINING TO WOOD FRAMING OR WOOD CONSTRUCTION SHALL CONFORM TO THE REQUIREMENTS LISTED IN CHAPTER 23 OF THE I.B.C.

2. ALL WOOD BEAMS, JOISTS AND COLUMNS SHALL BE #2 DOUGLAS FIR (D.F.) GRADE LUMBER OR BETTER (U.N.O.) MICRO–LAM BEAMS SHALL HAVE A MINIMUM ALLOWABLE BENDING STRESS OF 2,800 psi.

3. ALL GLUE LAMINATED TIMBER MEMBERS SHALL HAVE THE FOLLOWING MINIMUM STRESS GRADE LUMBER:
   1. BENDING = 2400 psi
   2. TENSION = 1100 psi
   3. COMPRESSION PARALLEL TO GRAIN = 1650 psi

4. GLUE LAMINATED STRUCTURAL MEMBERS SHALL CONFORM TO THE U.S. DEPARTMENT OF COMMERCE COMMERCIAL STANDARD PS–56 AND SECTION 2312, TABLES 23–I–C AND 23–I–D OF THE I.B.C.

5. ALL STRUCTURAL PLYWOOD SHALL BE STRUCTURAL I OR STRUCTURAL II GRADE. A.P.A. PERFORMANCE RATED WAFERBOARD, COMPOSITE BOARD, AND ORIENTED STRAND BOARD (BUT NOT STRUCTURAL PARTICLE BOARD) ARE ACCEPTED AS EQUIVALENT TO PLYWOOD, PROVIDING SPECIFIED SPAN RATINGS AND OTHER SPECIFIED REQUIREMENTS FOR PLYWOOD ARE MET.

6. ALL PLATES OR OTHER LUMBER IN CONTACT WITH CONCRETE OR WITHIN 6 INCHES OF EARTH SHALL BE FOUNDATION REDWOOD ALL MARKED OR BRANDED BY THE REDWOOD INSPECTION SERVICE OR PRESSURE TREATED FOR MOISTURE PROTECTION.

7. PROVIDE APPROVED BRIDGING AT A MAXIMUM OF 8 FEET O.C. BETWEEN FLOOR JOIST SUPPORTS FOR ALL SPANS OVER 14 FEET.

8. TRUSSES AND/OR WEB JOISTS SHALL HAVE ALL BLOCKING, BRACING, BRIDGING, AND ETC. AS RECOMMENDED BY THE MANUFACTURER.

9. WALLS SHALL RUN CONTINUOUS BETWEEN HORIZONTAL SUPPORT POINTS, UNLESS ADEQUATE APPROVED BRACING IS PROVIDED.

10. REQUIRED MINIMUM NAILING SCHEDULE FOR USE WHERE NOT NOTED OTHERWISE ON PLANS OR DETAILS: (SEE IBC TABLE NO. 23–Q)
    STUD TO PLATES_____TOE NAIL 4–8d OR END NAIL 2–16d
    DOUBLE TOP PLATES_____FACE NAIL 16" O.C. STAGGERED 1–16d w/ 2–16d AT LAPS AND INTERSECTIONS.
    DOUBLE STUDS_____FACE NAIL 24" O.C. 16d
    CORNER STUD AND ANGLES_____24" O.C. 16d
    JOIST TO SILL OR GIRDERS_____TOE NAIL 3–8d OR 2–16d
    SOLE PLATE TO JOIST/BLOCKING__FACE NAIL 16" O.C. 16d
    BRIDGING TO JOIST_____TOE NAIL EACH END 2– 8d
    PLYWOOD TO ROOF JOISTS, TRUSSES OR STUDS – SEE NAILING SCHEDULE.

11. NAILS OR OTHER APPROVED SHEATHING CONNECTORS SHALL BE DRIVEN FLUSH BUT SHALL NOT BREAK THE SURFACE OF THE SHEATHING.

12. CONNECT ALL WOOD TO CONCRETE, WOOD TO STEEL, AND WOOD TO WOOD (EXCEPT STUD TO PLATE) WITH SIMPSON OR EQUAL CONNECTORS U.N.O.

CONCRETE

1. ALL PHASES OF WORK PERTAINING TO THE CONCRETE CONSTRUCTION SHALL CONFORM TO THE BUILDING CODE REQUIREMENTS FOR REINFORCED CONCRETE (ACI 318) AND THE SPECIFICATIONS FOR STRUCTURAL CONCRETE FOR BUILDINGS (ACI 318) LATEST APPROVED EDITIONS, WITH MODIFICATIONS AS NOTED IN THE DRAWINGS OR SPECIFICATIONS.

2. CONCRETE MIXES SHALL BE DESIGNED BY A QUALIFIED TESTING LABORATORY. ALL CONCRETE IN CONTACT WITH THE EARTH SHALL CONTAIN TYPE V PORTLAND CEMENT UNLESS NOTED OTHERWISE (UNO). ALL CONCRETE SHALL BE AIR ENTRAINED BY 5% +/– 1%.

3. CALCIUM CHLORIDE SHALL NOT BE USED.

4. CONCRETE SHALL HAVE THE FOLLOWING MINIMUM COMPRESSIVE STRENGTHS WITHIN 28 DAYS AFTER PLACEMENT (UNO):

   FOOTINGS 4,000 psi
   FOUNDATION 4,000 psi
   INTERIOR FLATWORK 3,000 psi
   ALL EXTERIOR CONCRETE 3,000 psi

5. MAXIMUM CONCRETE SLUMP SHALL NOT EXCEED 4 INCHES.

6. ALL CONCRETE SHALL BE THOROUGHLY CURED ACCORDING TO ACI RECOMMENDATIONS. FOLLOW ACI 306R "COLD WEATHER CONCRETING" AND ACI 305R "HOT WEATHER CONCRETING" FOR ALL CONCRETE AND MASONRY WORK WHEN REQUIRED BY CURRENT WEATHER CONDITIONS.

7. CONDUITS AND PIPES EMBEDDED IN CONCRETE SHALL CONFORM TO THE REQUIREMENTS IN SECTION 1906.3 OF 2003 INTERNATIONAL BUILDING CODE.

8. NO ALUMINUM OR ANY METAL INJURIOUS TO CONCRETE SHALL BE EMBEDDED IN CONCRETE.

9. BOTH INTERIOR AND EXTERIOR CONCRETE SLABS–ON–GRADE SHALL BE A MINIMUM OF 4 INCHES IN THICKNESS UNO, WITH SAWN OR TOOLED JOINTS A MAXIMUM 12 FEET IN EACH DIRECTION. SAWN JOINTS SHALL BE 1/4 SLAB THICKNESS IN DEPTH AND SHALL BE CUT AS SOON AS SURFACE ALLOWS AND NOT MORE THAN 12 HOURS AFTER CONCRETE PLACEMENT. CONSTRUCTION JOINTS SHALL BE MADE AND LOCATED AS TO LEAST IMPAIR ALL REINFORCING, AND BARS SHALL BE CONTINUOUS THROUGH JOINTS (UNO).

10. CLEAR COVERAGE OF CONCRETE OVER OUTER REINFORCEMENT BARS SHALL BE AS FOLLOWS (UNO):
    – FOR CONCRETE PLACED DIRECTLY AGAINST EARTH, 3 IN. COVER
    – FOR CONCRETE SURFACES EXPOSED TO WEATHER, 1 1/2 IN. COVER
    – FOR CONCRETE SURFACES EXPOSED TO GROUND AFTER REMOVAL OF FORMS, 2" COVER.
    – FOR CONCRETE SURFACES NOT EXPOSED TO THE GROUND OR WEATHER: SLABS AND WALLS, 3/4 IN. COVER; JOISTS OR WAFFLE BEAMS, 1 IN. COVER; BEAMS, PIERS, AND COLUMNS, 1 1/2 IN. COVER.

11. WHERE CONCRETE GIRTHS, BEAMS, OR WALLS ARE CONTINUOUS AROUND A CORNER, ADD CORNER BARS TO LAP 40 BAR DIAMETERS IN EACH DIRECTION. REINFORCING BARS IN THE INTERIOR FACES SHALL EXTEND TO WITHIN 2 IN. OF THE OUTER FACE AND SHALL TERMINATE IN A STANDARD HOOK OR BEND.

12. AROUND OPENINGS IN CONCRETE SLABS, UNLESS OTHERWISE SCHEDULED, ADD REINFORCING EQUIVALENT TO BARS CUT BY OPENING. THE BARS PARALLEL TO THE MAIN REINFORCEMENT SHALL RUN THE FULL LENGTH OF THE SPAN. THE BARS PARALLEL TO THE TEMPERATURE STEEL SHALL RUN 40 BAR DIAMETERS EACH WAY BEYOND THE OPENING.

REINFORCING STEEL (FOR CONCRETE AND MASONRY)

1. ALL REINFORCING STEEL SHALL BE DETAILED AND PLACED IN CONFORMANCE WITH THE BUILDING CODE REQUIREMENTS FOR REINFORCED CONCRETE (ACI 318 LATEST EDITION) AND THE MANUAL OF STANDARD PRACTICE FOR REINFORCED CONCRETE CONSTRUCTION (1973 EDITION) BY THE CRSI AND THE WCRSI, AS MODIFIED BY THE PROJECT DRAWINGS AND SPECIFICATIONS.

2. CHAIRS, SUPPORTS AND TIE BARS REQUIRED IN ADDITION TO THE SCHEDULED REINFORCING SHALL BE FURNISHED BY THE CONTRACTOR.

3. ALL STEEL REINFORCEMENT SHALL CONFORM TO ASTM A615 GRADE 60 WITH A MINIMUM YIELD STRENGTH OF 60,000 psi, WITH THE FOLLOWING THREE EXCEPTIONS:

   1. #3 AND #4 COLUMN TIES AND BEAM STIRRUPS AND BREAKOUT DOWELS SHALL BE GRADE 40 WITH A MINIMUM YIELD STRENGTH OF 40,000 psi.
   2. ANY AND ALL REINFORCING THAT IS TO BE WELDED SHALL BE DEFORMED WELDABLE BAR (DWB) THAT CONFIRMS TO ASTM A706 GRADE 60.
   3. UNLESS NOTED OTHERWISE (UNO) ON DRAWINGS.

4. WELDING OF REINFORCING SHALL BE WITH LOW HYDROGEN ELECTRODES IN CONFORMANCE WITH RECOMMENDED PRACTICES FOR WELDING REINFORCING STEEL AMERICAN WELDING SOCIETY, AWS–D1.4.

5. SPLICES OF REINFORCING BAR, IF REQUIRED, SHALL BE AVOIDED AT POINTS OF MAXIMUM STRESS. ALL SPLICES AND LAPS IN REINFORCING BARS SHALL CONFORM TO TYPICAL DETAIL B/S0.1. SPLICES SHALL BE MADE IN A REGION OF COMPRESSION, UNLESS SHOWN OTHERWISE.

6. REINFORCING BARS SHALL NEITHER BE WELDED NOR BENT BY HEATING. WHERE INSERTS REQUIRE WELDING TO PLATES, ANGLES OR THE LIKE, DEFORMED WELDABLE BARS SHALL BE USED.

7. ALL HOOKS IN REINFORCING BARS SHALL BE BENT 180 DEGREES WITH AN INSIDE DIAMETER OF 6 BAR DIAMETERS FOR BARS UP TO 1 IN. AND 8 BAR DIAMETERS FOR BARS OVER 1 IN. IN DIAMETER. EXTEND BARS A MINIMUM OF 4 BAR DIAMETERS BEYOND BEND. REFER TO STANDARD REBAR BEND DETAILS (A/S0.1) AND TYP. REBAR LAP LENGTH DETAILS (B/S0.1) FOR CLARIFICATION

8. WELDED WIRE FABRIC SHALL CONFORM TO ASTM. A185 WITH A YIELD STRENGTH OF 65000 psi, OR ASTM A497 WITH A YIELD STRENGTH OF 70000 psi.

9. MINIMUM LAP OF WELDED WIRE FABRIC SHALL BE 6 INCHES OR ONE FULL MESH AND ONE HALF, WHICHEVER IS GREATER.

10. DOWELS BETWEEN FOOTINGS AND WALLS OR COLUMNS SHALL BE THE SAME GRADE, SIZE, AND SPACING OR NUMBER AS THE VERTICAL REINFORCING, RESPECTIVELY, UNO.

INSPECTION OF STEEL CONSTRUCTION

1. SPECIAL INSPECTION OF WELDS MADE TO STRUCTURAL STEEL (IE. COLUMNS, BASE PLATES, SADDLES, BRACKETS, ETC.) SHALL BE MADE IN ACCORDANCE WITH AWS D1.1 AND SHALL BE MADE PRIOR TO THE COVERING OF SUCH WELDS.

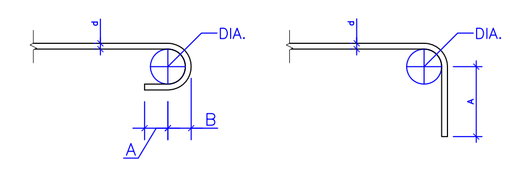

BAR SIZE	d (BAR DIA.)	DIA.	180° HOOKS		90° BENDS
			A	B	A
#3	3/8"	2 1/4"	2 1/2"	1 1/2"	4 1/2"
#4	1/2"	3"	2 1/2"	2"	6"
#5	5/8"	3 3/4"	2 1/2"	2 1/2"	7 1/2"
#6	3/4"	4 1/2"	3"	3"	9"

A STANDARD REBAR BENDS DETAIL
NTS

BAR SIZE	d (BAR DIA.)	LAP LENGTH	HOOK EMBED
#3	3/8"	15"	6 1/2"
#4	1/2"	19 1/2"	8 1/2"
#5	5/8"	24"	10 1/2"
#6	3/4"	29"	12 1/2"

B TYP. REBAR LAP LENGTHS
NTS

DATE:	REVISION:
5/16/11	INITIAL DESIGN
	OWNER REVIEW
	CITY APPROVAL
	FOR CONSTRUCTION

KC FAIRGROUNDS BUILDING
STRUCTURAL SPECIFICATIONS
KANE COUNTY, UTAH
SCALE= NTS
REDUCE SCALE BY ½ FOR 11x17 DRAWINGS

TC ENGINEERING, PC
A "DESIGN-BUILD" FIRM
EXCELLENCE...ON TIME!
DANIEL W. THEBEAU, P.E.
P.O. BOX 55, KANAB, UTAH 84741
(435)644-2031 (888)644-2031
(435)689-0155

DATE: MAY. 2011
FILE: KC
SHEET: S0.1
DRAWN BY: RMD

FRAMING SCHEDULE:

(A) 16" BCI 60-2.0 DF I-JOISTS AT 16" o.c. MAX. w/ ITT TYPE HANGER WHERE JOIST OCCURS AT FLUSH BEAM

FRAMING PLAN NOTES:

1. REFER TO PLANS AND DETAILS FOR ALL NAILING REQUIREMENTS. WHERE NAILING IS NOT SPECIFIED ON DRAWINGS, REFER TO TABLE 2304.9.1 OF THE 2009 IBC FOR MINIMUM NAILING REQUIREMENTS
2. INTERIOR BEARING WALL FRAMING SHALL BE 2x6 STUDS AT 16" o.c. MAX., U.N.O. ON PLAN. INTERIOR NON-BEARING WALLS SHALL BE MIN. 2x4 STUDS AT 16" o.c. MAX., U.N.O. ON PLANS. REFER TO ARCH'L DRAWINGS FOR REQ'D 2x6 INTERIOR PLUMBING WALLS
3. PROVIDE MIN. (1) TRIMMER STUD AND (1) KING STUD AT EACH END OF EACH WOOD HEADER U.N.O. ON PLAN. PROVIDE MIN. (1) TRIMMER STUD AT EACH INTERIOR BEARING LOCATION AT CONTINUOUS BEAM
4. PROVIDE CONTINUOUS DOUBLE TOP PLATE AT ALL WOOD FRAMED BEARING WALLS. WHERE TOP PLATE CANNOT BE RUN CONTINOUS OVER HEADER, STRAP HEADER TO TOP PLATE w/ CS16x32" w/ (28) 8d EA. END OF HEADER
5. REFER TO TYPICAL DETAIL 208/S4.0 FOR HEADER TO KING STUD/POST CONNECTION
6. REFER TO SHEAR/BRACED WALL SCHEDULE FOR MINIMUM SHEAR REQUIREMENTS
7. TYP. FLOOR SHEATHING SHALL BE 3/4" THICK PLYWOOD OR O.S.B. APA RATED STRUCTURAL GRADE 1 w/ 10d RING SHANK NAILS AT 6" o.c. EDGES AND 12" o.c. FIELD U.N.O. ON PLANS OR DETAILS.
8. LAMINATED VENEER LUMBER (LVL) SHALL HAVE A MINIMUM ALLOWABLE BENDING STRESS (Fb) OF 2800 PSI AND A MINIMUM MODULUS OF ELASTICITY (E) OF 2,000,000 PSI. MULTI-PLY LVL BEAMS SHALL BE FASTENED TOGETHER PER MFR. SPECIFICATIONS
9. WEB STIFFENERS FOR I-JOISTS SHALL BE INSTALLED AT ALL LOCATIONS AS NOTED ON DETAILS OR AS REQUIRED BY THE JOIST MANUFACTURER.
10. ALL HARDWARE SHALL BE SIMPSON STRONG TIE OR APPROVED EQUAL. CONNECTORS SHALL BE INSTALLED IN ACCORDANCE WITH MFR'S WRITTEN INSTRUCTIONS USING THE TYPE, SIZE AND NUMBER OF FASTENERS SPECIFIED FOR EACH CONNECTOR.
11. STRUCTURAL FRAMING MEMBERS SHALL NOT BE NOTCHED, DRILLED OR OTHERWISE ALTERED WITHOUT WRITTEN PERMISSION OF THE STRUCTURAL ENGINEER.
12. 1 1/4" x 16" VERSA-LAM 1.4 1800 RIM BOARD OR APPROVED EQUAL SHALL BE USED EVERYWHERE RIM JOIST IS SHOWN IN DETAILS
13. I-JOISTS SHALL BE AS MANUFACTURED BY BOISE CASCADE CORPORATION OR APPROVED EQUAL.
14. 1 1/4" x 16" VERSA-LAM 1.4 1800 RIM BOARD OR APPROVED EQUAL SHALL BE USED EVERYWHERE RIM JOIST IS SHOWN IN DETAILS

INTERIOR BEARING WALL

FOUNDATION PLAN NOTES:

1. TYP. MINIMUM EXTERIOR FOOTING EMBEDMENT SHALL BE 18" UNLESS NOTED OTHERWISE ON PLANS OR DETAILS
2. REFER TO STRUCTURAL SPECIFICATIONS FOR ALL PAD GRADING AND PREPARATION AS WELL AS COMPACTION REQUIREMENTS
3. TYP. SLAB SHALL BE 4" THICK AND REINFORCEMENT SHALL BE #3 BARS AT 24" o.c. EACH WAY CENTERED IN SLAB THICKNESS UNLESS NOTED OTHERWISE ON PLANS OR DETAILS
4. ALL CONCRETE EXCEPT RETAINING/FOUNDATION WALLS, FOOTINGS SUPPORTING RETAINING/FOUNDATION WALLS, AND PEDESTALS SUPPORTING STEEL COLUMNS SHALL BE TYPE V CONCRETE AND SHALL HAVE A MINIMUM COMPRESSIVE STRENGTH OF 3000 PSI AT 28 DAYS. RETAINING/FOUNDATION WALLS, FOOTINGS SUPPORTING RETAINING/FOUNDATION WALLS, AND PEDESTALS SUPPORTING METAL BUILDING COLUMNS SHALL HAVE A COMPRESSIVE STRENGTH OF 4000 PSI AT 28 DAYS.
5. ALL INTERIOR SLABS ON GRADE TO BE CAST OVER MINIMUM 2" SAND OVER 10 MIL VISQUEEN OVER 6" TYPE II AGGREGATE BASE OR PROVIDE EQUIVALENT VAPOR/MOISTURE BARRIER. NOT REQ'D WHERE NO FLOOR COVERINGS TO BE APPLIED
6. VERIFY ALL FOUNDATION AND SLAB DIMENSIONS w/ METAL BUILDING DRAWINGS. REFER TO METAL BUILDING DRAWINGS FOR BOLT DIAMETER AND LAYOUT FOR STEEL COLUMNS
7. CONTRACTOR TO VERIFY LOCATION OF ALL ANCHOR BOLTS, HOLDOWN ANCHORS, INSERTS, PLUMBING, ETC... PRIOR TO PLACING CONCRETE
8. REFER TO SHEET S0.1 FOR LAP SCHEDULE (B) AND STANDARD BENDS DETAIL (A)
9. VERIFY ALL DIMENSIONS w/ ARCH'L DRAWINGS PRIOR TO PLACING CONCRETE
10. CLEAR BUILDING PAD OF ALL LOOSE DEBRI, SHRUBS, ORGANIC MATERIAL, ETC.. PRIOR TO PLACEMENT OF CONCRETE
11. ALL WOOD IN CONTACT w/ CONCRETE (I.E. LEDGERS, NAILERS, ETC...) SHALL BE PRESSURE TREATED OR PROVIDE APPROVED VAPER BARRIER BETWEEN WOOD AND CONCRETE
12. PROVIDE 1/2" DIA. x 10" ANCHOR BOLTS AT 48" o.c. AT ALL EXTERIOR AND BEARING WALLS TYP., U.N.O. ON PLANS OR SHEAR/BRACED WALL SCHEDULE ON SHEET S0.2. MIN. (2) ANCHOR BOLTS PER PLATE
13. REFER TO FRAMING PLAN FOR LOCATION AND LENGTH OF ALL BRACED WALLS AND BOTTOM PLATE ANCHOR BOLTING REQUIREMENTS
14. SHEAR/BRACED WALL HOLDOWNS SHALL BE MARKED ON PLAN AS FOLLOWS. HOLDOWNS SHALL BE FASTENED TO END STUDS OF SHEAR WALL. FOLLOW ALL MFR. REQUIREMENTS FOR INSTALLATION OF HOLDOWNS:

1 SIMPSON LSDTHD8 (INSTALL PER MFR. RECOMMENDATIONS)

1 1 DENOTES SHEAR/BRACED WALL AND REQ'D HOLDOWNS AS OCCUR

FOOTING SCHEDULE					
FOOTING LABEL	FOOTING LENGTH/WIDTH	FOOTING THICKNESS	FOOTING EMBED	REQ'D REINFORCING	DETAIL REFERENCE
F1	4'-0" x 4'-0" SQ.	12"	PER DETAIL	(4) #5 BARS E.W. BOTTOM	---
F2	2'-4" x 2'-4" SQ.	12"	PER DETAIL	(3) #5 BARS E.W. BOTTOM	---
F3	5'-6" x 5'-6" SQ.	12"	PER DETAIL	(6) #5 BARS E.W. BOTTOM	P1
F4	3'-10" x 3'-10" SQ.	12"	PER DETAIL	(4) #5 BARS E.W. BOTTOM	P2
F5	REFER TO DETAIL 107	REFER TO DETAIL 107	REFER TO DETAIL 107	REFER TO DETAIL 107	P1
F6	REFER TO DETAIL 107	REFER TO DETAIL 107	REFER TO DETAIL 107	REFER TO DETAIL 107	P2
F7	3'-4" x 3'-4" SQ.	12"	PER DETAIL	(4) #5 BARS E.W. BOTTOM	---

SHEAR/BRACED WALL SCHEDULE			
SHEAR/ BRACED WALL	SHEATHING THICKNESS	SHEATHING NAILING	BOTTOM PLATE NAILING/ANCHOR BOLTS
BW1	3/8"	8d AT 6" o.c. EDGES, 12" o.c. FIELD	16d AT 6" o.c. OR 1/2" DIA. x 10" A.B. AT 32" o.c.

SHEAR/BRACED WALL NOTES:

1. REFER TO PLAN FOR MINIMUM LENGTH AND LOCATION OF SHEAR/BRACED WALLS
2. MIN. (2) FULL HEIGHT STUDS REQUIRED AT EACH END OF SHEAR WALLS w/ HOLDOWNS. ONLY (1) REQ'D AT SHEAR/BRACED WALLS WITHOUT HOLDOWNS
3. BLOCK AND EDGE NAIL ALL SHEATHING PANEL EDGES w/ SOLID 2x BLOCKING
4. REFER TO FOUNDATION PLAN FOR SHEAR WALL HOLDOWN TYPE AND LOCATION AS OCCUR
5. SHEAR WALLS SHALL BE BEARING WALLS UNLESS NOTED OTHERWISE ON PLAN
6. BOTTOM PLATE NAILING SHALL BE USED WHERE SHEAR WALL OCCURS AT RAISED FLOOR AND ANCHOR BOLTS SHALL BE USED WHERE SHEAR WALL OCCURS AT FOUNDATION. EXTEND SHEAR WALL SHEATHING NAILNG TO NAILER AT CONCRETE WALL WHERE SHEAR WALLS OCCUR AT WOOD FLOOR OVER CONCRETE WALL

BW# (LENGTH) DENOTES SHEAR/BRACED WALL

BASEPLATE SCHEDULE					
B.P. LABEL	B.P. TYPE	B.P. LENGTH/WIDTH	B.P. THICKNESS	ANCHOR BOLTS	A.B. EMBED DEPTH/TYPE
B1	A	10" x 10"	3/8"	(4) 5/8" DIA. A.B.	10" J BOLT
B2	B	BY OTHERS	BY OTHERS	(4) 1" DIA. A.B.	28" HEADED BOLT
B3	A	BY OTHERS	BY OTHERS	(4) 3/4" DIA. A.B.	10" J BOLT

A. ALL EDGE DISTANCE, END DISTANCE, AND BOLT SPACINGS SHALL BE PER MINIMUM AISC SPECIFICATIONS. MIN. CENTERLINE OF BOLT TO EDGE DISTANCE SHALL BE 1¾"

B. ALL BOLT EMBED DEPTHS ARE TO BE MEASURED FROM TOP OF CONCRETE

C. J-BOLTS AS SPECIFIED ON THE TABLE ABOVE MAY BE SUBSTITUTED WITH HEADED BOLTS OF EQUAL LENGTH AS DESIRED. HEADED BOLTS MAY NOT BE SUBSTITUTED WITH J-BOLTS

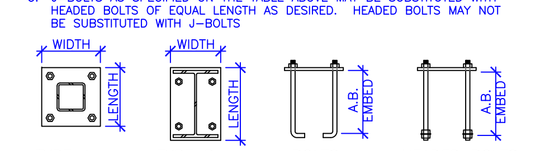

DATE:	REVISION:
5/16/11	INITIAL DESIGN
	OWNER REVIEW
	CITY APPROVAL
	FOR CONSTRUCTION

KC FAIRGROUNDS BUILDING
PLAN NOTES / SCHEDULES
KANE COUNTY, UTAH

SCALE= NTS

REDUCE SCALE BY ½ FOR 11x17 DRAWINGS

TC ENGINEERING, PC
A "DESIGN-BUILD" FIRM
EXCELLENCE...ON TIME!
DANIEL W. THEBEAU, P.E.
P.O. BOX 55, KANAB, UTAH 84741
(435)644-2031 (888)644-2031
(435)689-0155

DATE: MAY. 2011

FILE: KC

DRAWN BY: RMD

SHEET: S0.2

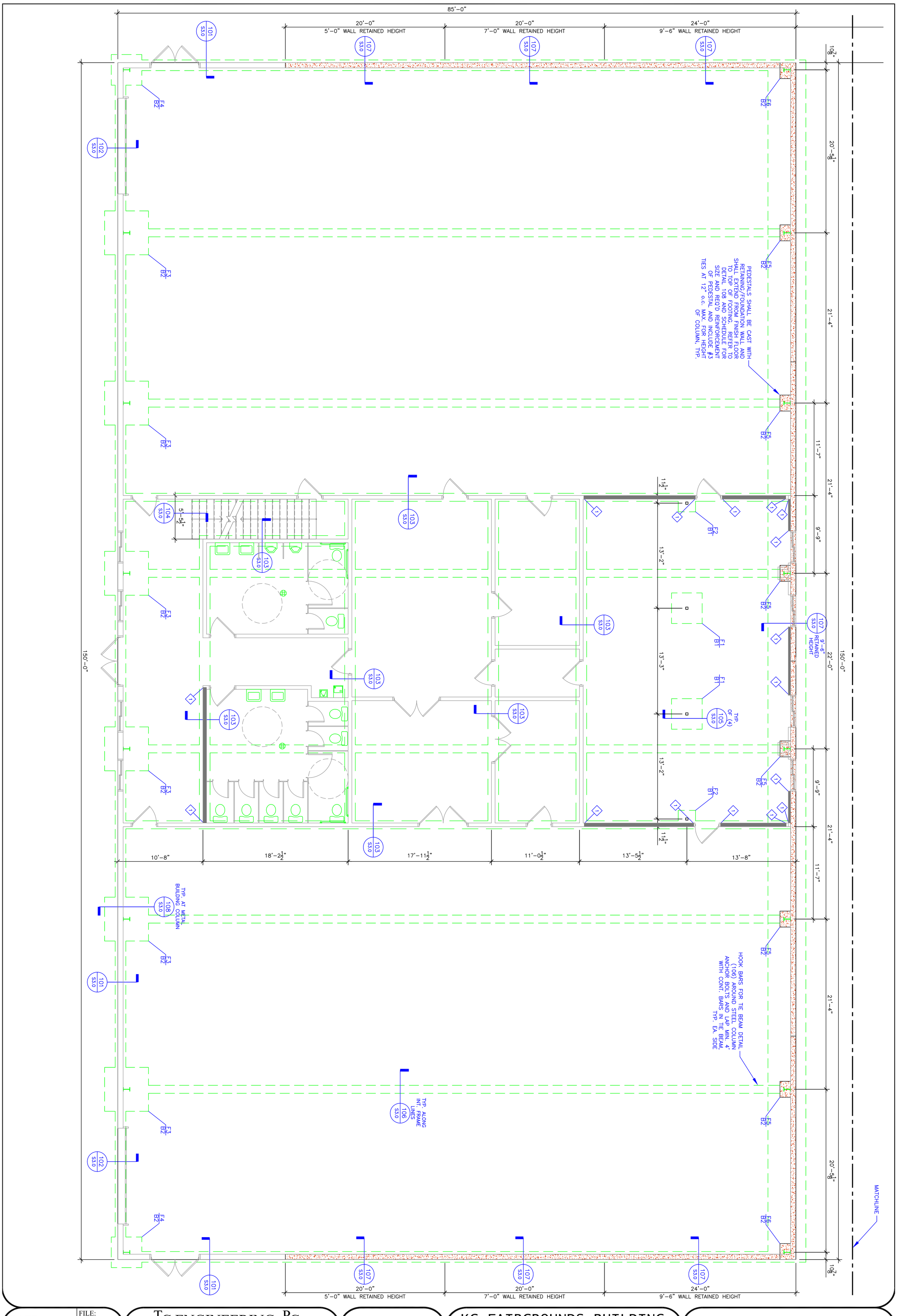

DATE:	FILE:
MAY. 2011	KC
SHEET:	DRAWN BY:
S1.0	RMD

TC ENGINEERING, PC
A "DESIGN-BUILD" FIRM
EXCELLENCE....ON TIME!
DANIEL W. THEBEAU, P.E.
P.O. BOX 55, KANAB, UTAH 84741
(435)644-2031 (888)644-2031
(435)689-0155

KC FAIRGROUNDS BUILDING
FOUNDATION PLAN
KANE COUNTY, UTAH

SCALE= 3/16"=1'-0"

REDUCE SCALE BY ½ FOR 11x17 DRAWINGS

DATE:	REVISION:
5/16/11	INITIAL DESIGN
	OWNER REVIEW
	CITY APPROVAL
	FOR CONSTRUCTION

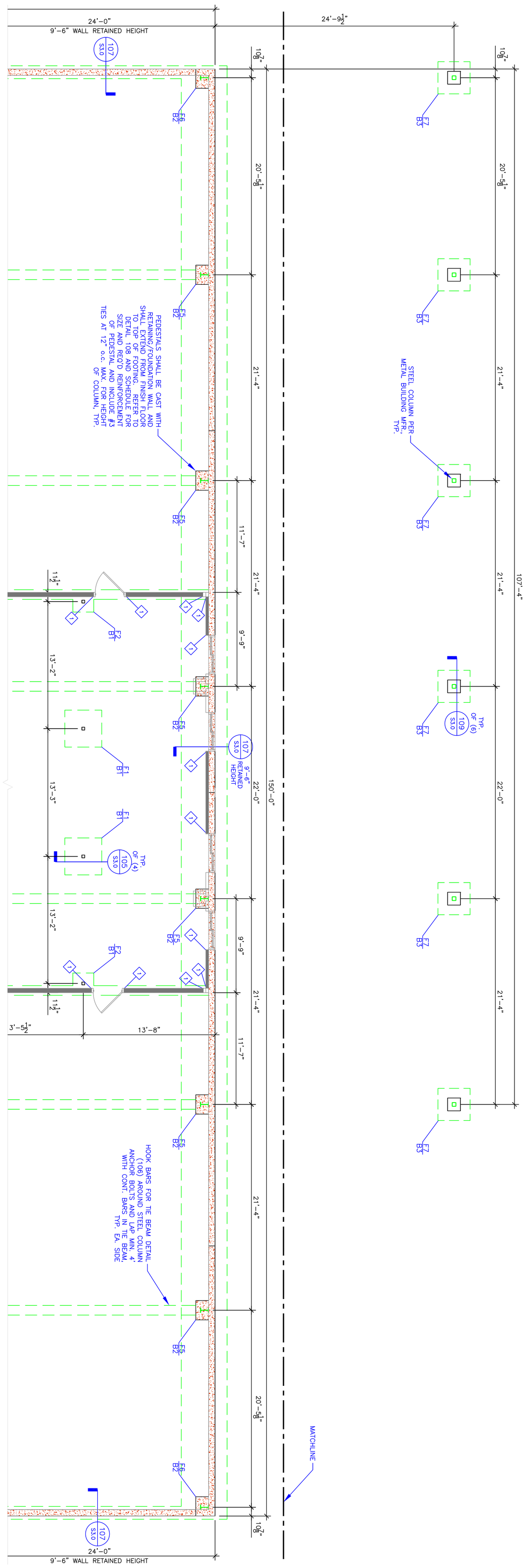

DATE:	FILE:
MAY. 2011	KC
SHEET:	DRAWN BY:
S1.1	RMD

TC ENGINEERING, PC
A "DESIGN-BUILD" FIRM
EXCELLENCE....ON TIME!
DANIEL W. THEBEAU, P.E.
P.O. BOX 55, KANAB, UTAH 84741
(435)644-2031 (888)644-2031
(435)689-0155

KC FAIRGROUNDS BUILDING
FOUNDATION PLAN
KANE COUNTY, UTAH

SCALE= 3/16"=1'-0"

REDUCE SCALE BY ½ FOR 11x17 DRAWINGS

DATE:	REVISION:
5/16/11	INITIAL DESIGN
	OWNER REVIEW
	CITY APPROVAL
	FOR CONSTRUCTION

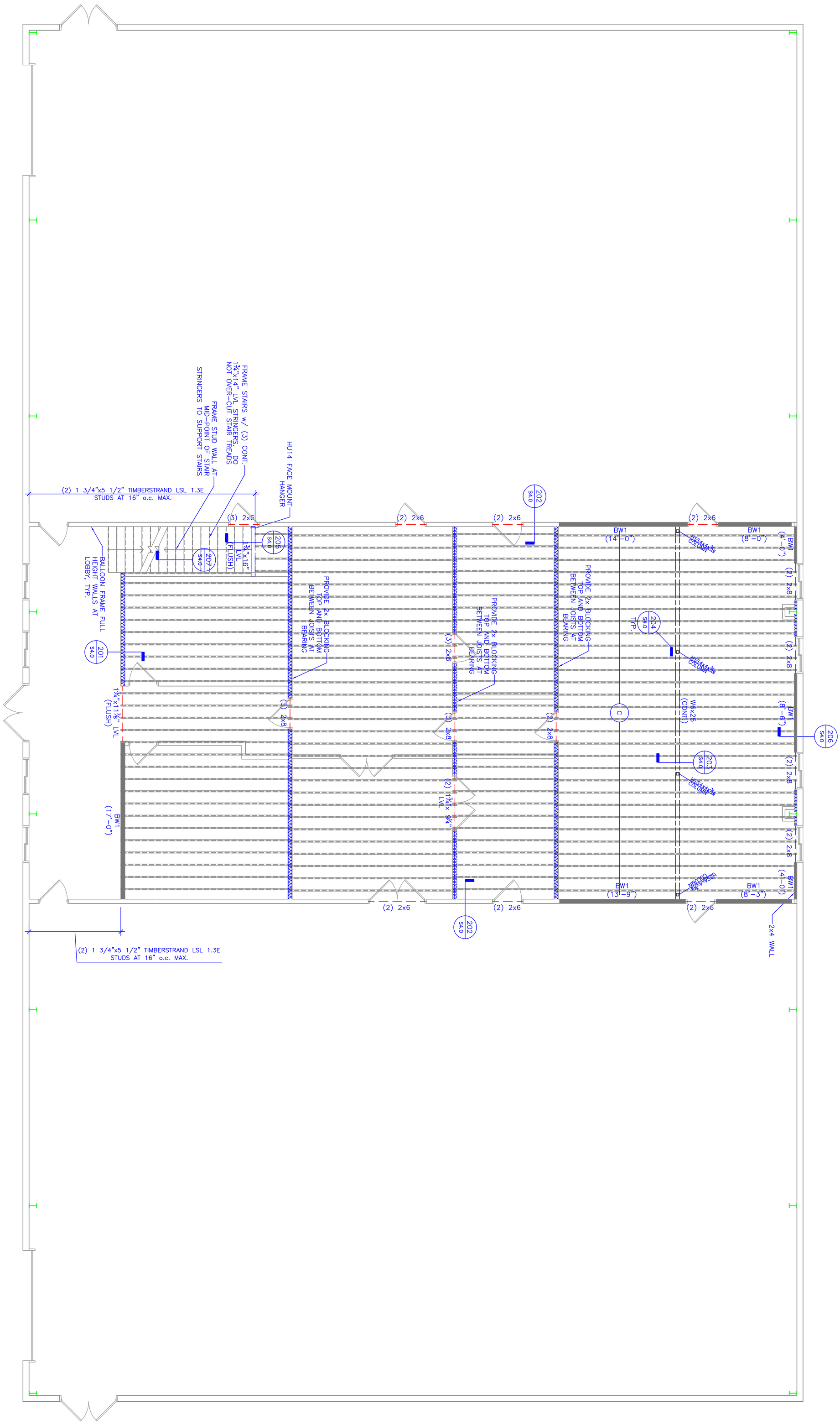

DATE:	FILE:
MAY. 2011	KC
SHEET:	DRAWN BY:
S2.0	RMD

TC ENGINEERING, PC
A "DESIGN-BUILD" FIRM
EXCELLENCE....ON TIME!
DANIEL W. THEBEAU, P.E.
P.O. BOX 55, KANAB, UTAH 84741
(435)644-2031 (888)644-2031
(435)689-0155

KC FAIRGROUNDS BUILDING
FLOOR FRAMING PLAN
KANE COUNTY, UTAH

SCALE= 3/16"=1'-0"

REDUCE SCALE BY ½ FOR 11x17 DRAWINGS

DATE:	REVISION:
5/16/11	INITIAL DESIGN
	OWNER REVIEW
	CITY APPROVAL
	FOR CONSTRUCTION

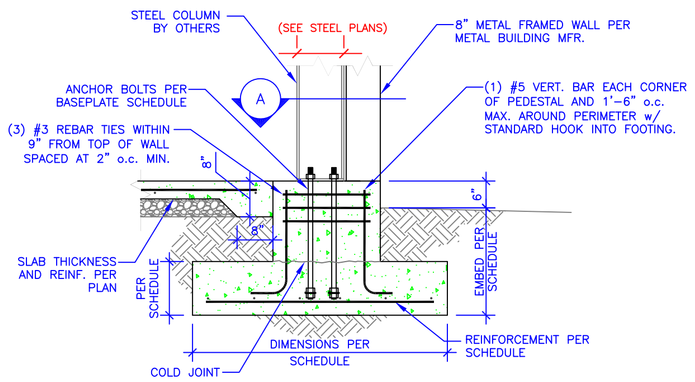

109 STEEL COLUMN AT EXTERIOR FOOTING
N.T.S.

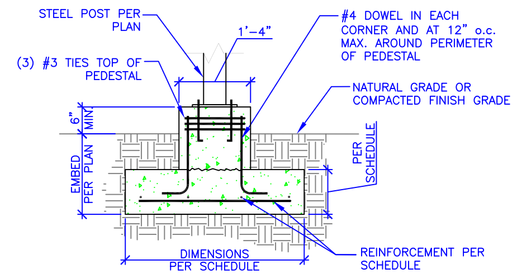

106 CONT. TIE GRADE BEAM
N.T.S.

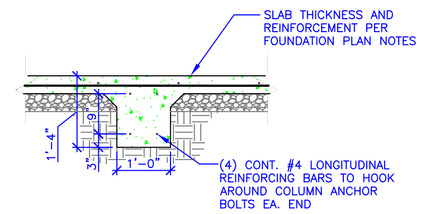

103 CONT. INTERIOR THICKENED SLAB FOOTING
N.T.S.

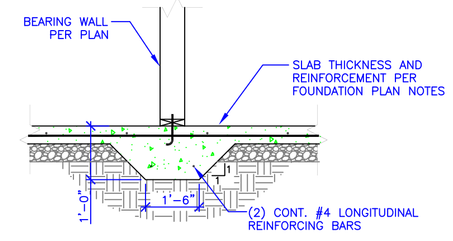

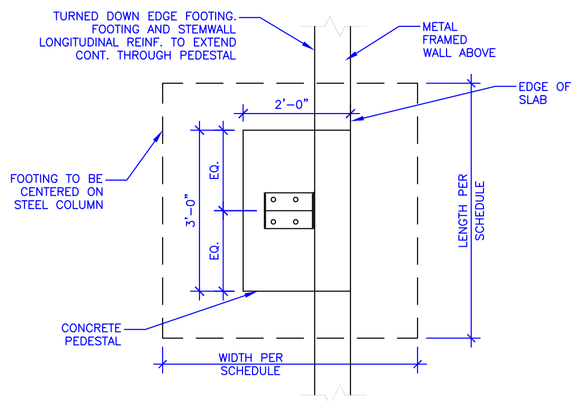

P1 PLAN VIEW – INTERIOR SIDE COLUMN
NTS

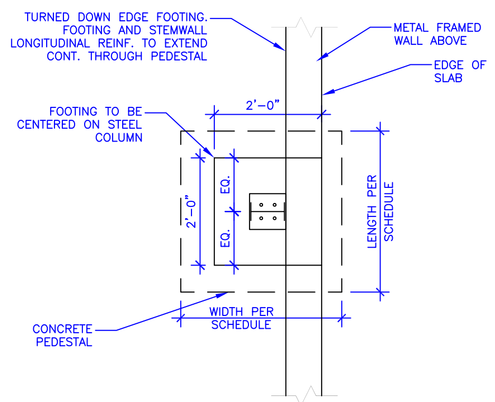

P4 PLAN VIEW – LEFT ENDWALL
NTS

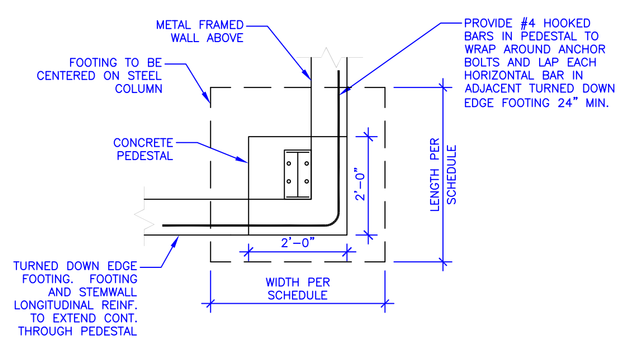

P2 PLAN VIEW – TYP. CORNER
NTS

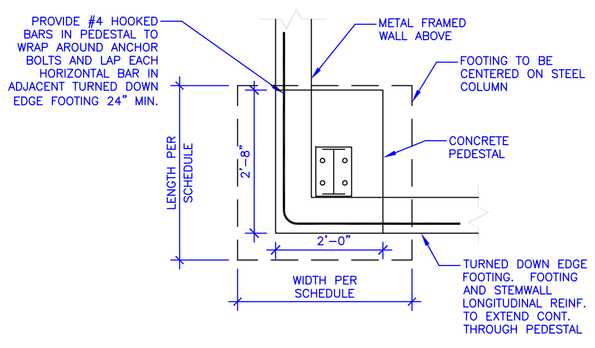

P3 PLAN VIEW – LEFT ENDWALL COLUMN 5
NTS

A. REFER TO METAL BUILDING DRAWINGS FOR EXACT LOCATION AND PLACEMENT OF STEEL COLUMNS AND ANCHOR BOLTS

B. REFER TO FOOTING SCHEDULE FOR PEDESTAL SIZE AND CONFIGURATION NOTED AS P1, P2, P3....

C. PROVIDE ADEQUATE CONCRETE CLEAR COVER AROUND ANCHOR BOLTS, TYP.

108 TYP. FOOTING AT METAL BUILDING COLUMN
N.T.S.

RETAINED SOIL HEIGHT	① FOOT. WIDTH	② KEY DEPTH	③ 10" WALL VERT. REINF.	④ KEY REINF.
5'-0"	2'-9"	0'-8"	#4 @ 18" o.c.	NOT REQ'D
7'-0"	3'-6"	1'-8"	#5 @ 18" o.c.	#5 @ 14" o.c.
9'-6"	4'-9"	1'-11"	#5 @ 9" o.c.	#5 @ 14" o.c.

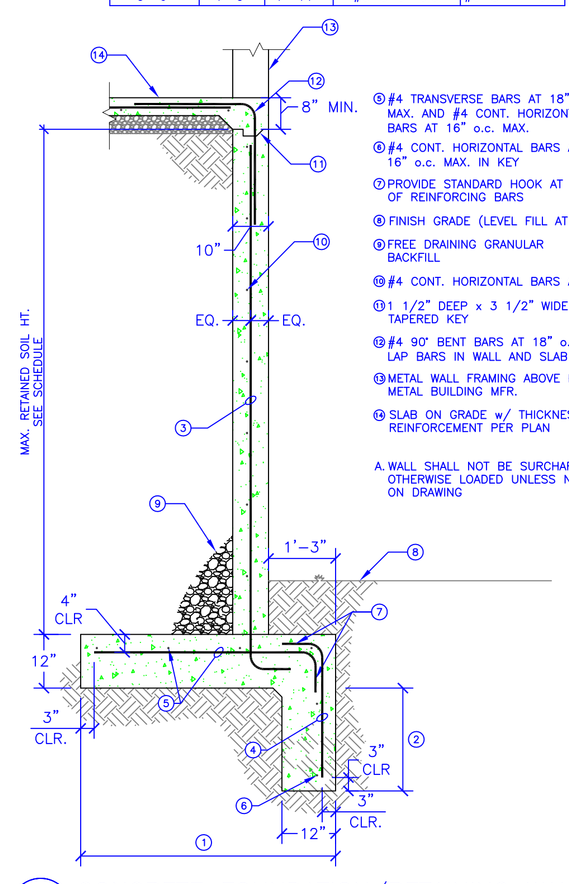

⑤ #4 TRANSVERSE BARS AT 18" o.c. MAX. AND #4 CONT. HORIZONTAL BARS AT 16" o.c. MAX.

⑥ #4 CONT. HORIZONTAL BARS AT 16" o.c. MAX. IN KEY

⑦ PROVIDE STANDARD HOOK AT END OF REINFORCING BARS

⑧ FINISH GRADE (LEVEL FILL AT TOE)

⑨ FREE DRAINING GRANULAR BACKFILL

⑩ #4 CONT. HORIZONTAL BARS AT 16" o.c.

⑪ 1 1/2" DEEP x 3 1/2" WIDE x CONT. TAPERED KEY

⑫ #4 90° BENT BARS AT 18" o.c. MAX. LAP BARS IN WALL AND SLAB 24" MIN.

⑬ METAL WALL FRAMING ABOVE PER METAL BUILDING MFR.

⑭ SLAB ON GRADE w/ THICKNESS AND REINFORCEMENT PER PLAN

A. WALL SHALL NOT BE SURCHARGED OR OTHERWISE LOADED UNLESS NOTED ON DRAWING

107 CONCRETE FOUNDATION/RETAINING WALL
N.T.S.

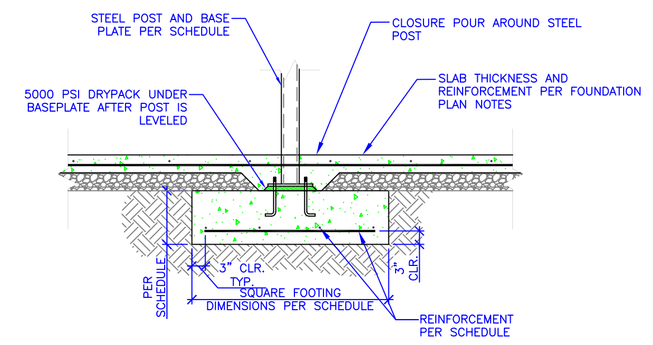

105 STEEL POST AT FOOTING
N.T.S.

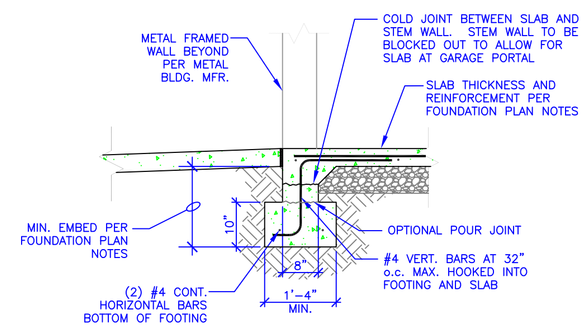

102 TYP. FOOTING AT GARAGE PORTAL
N.T.S.

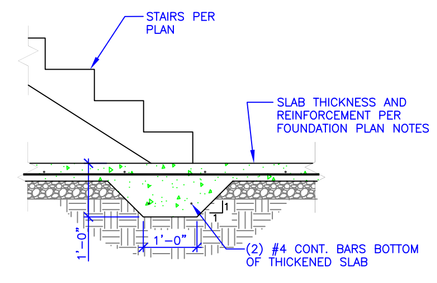

104 TYP. THICKENED SLAB FOOTING AT STAIRS
N.T.S.

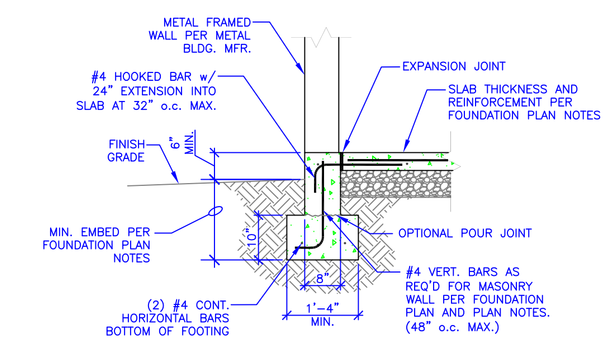

101 TYP. EXTERIOR PERIMETER FOOTING
N.T.S.

DATE:	REVISION:
5/16/11	INITIAL DESIGN
	OWNER REVIEW
	CITY APPROVAL
	FOR CONSTRUCTION

KC FAIRGROUNDS BUILDING FOUNDATION DETAILS
KANE COUNTY, UTAH

SCALE= NTS

REDUCE SCALE BY ½ FOR 11x17 DRAWINGS

TC ENGINEERING, PC
A "DESIGN-BUILD" FIRM
EXCELLENCE....ON TIME!
DANIEL W. THEBEAU, P.E.
P.O. BOX 55, KANAB, UTAH 84741
(435)644-2031 (888)644-2031
(435)689-0155

DATE:	FILE:	DRAWN BY:
MAY. 2011	KC	RMD
SHEET:		
S3.0		

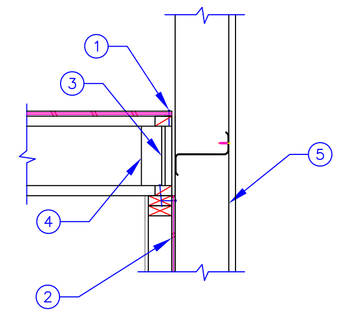

1. BOUNDARY FASTENERS (10d AT 6" o.c. MAX.)
2. WALL SHEATHING AND NAILING PER FRAMING PLAN NOTES OR SHEAR WALL SCHEDULE WHERE SHEAR WALL OCCURS ON PLAN
3. I-JOIST BLOCKING BETWEEN JOISTS AT BEARING FASTENED TO TOP PLATE BELOW w/ 16d AT 8" o.c. MAX.
4. WEB STIFFENERS PER I-JOIST MFR. OR DESIGNER RECOMMENDATIONS
5. PRE-FAB METAL BUILDING WALL PER METAL BUILDING MFR.

206 FLOOR JOIST AT STUD WALL
N.T.S.

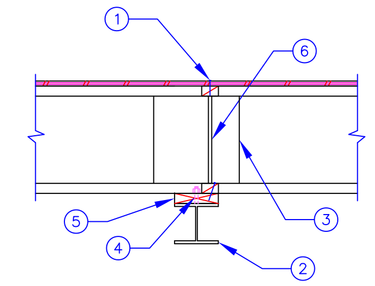

1. BOUNDARY FASTENERS (10d AT 6" o.c. MAX.)
2. STEEL BEAM PER PLAN
3. WEB STIFFENERS AS REQ'D PER I-JOIST MFR. OR DESIGNER RECOMMENDATIONS
4. ½" DIA. THREADED STUDS AT 2'-0" o.c. AUTOMATIC WELDED TO STEEL BEAM
5. CONT. 2x NAILER RIPPED TO MATCH BEAM FLANGE WIDTH AND BOLTED TO BEAM
6. I-JOIST BLOCKING BETWEEN JOISTS AT BEARING w/ 16d TOENAILS AT 8" o.c. MAX. TO NAILER BELOW

203 FLOOR JOISTS AT STEEL BEAM
N.T.S.

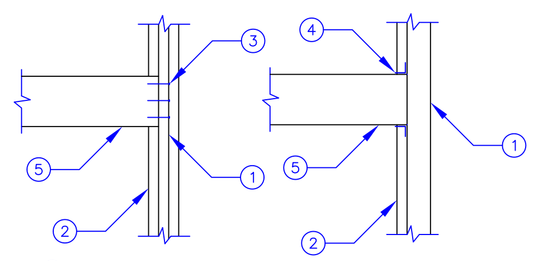

1. KING STUDS/POST PER PLAN
2. TRIMMER STUD
3. (3) 16d FROM KING STUD TO HEADER
4. A34 CLIP FROM HEADER TO KING STUD. CLIP MAY BE INSTALLED EITHER ON TOP OR BOTTOM OF HEADER
5. HEADER PER PLAN

208 HEADER AT KING STUD/POST
N.T.S.

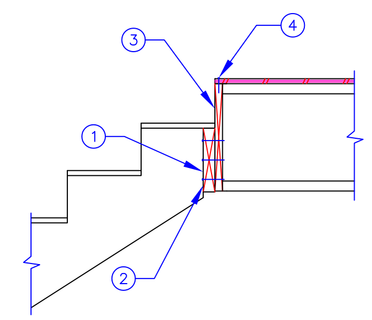

1. 9½" DEEP LVL LEDGER W/ (3) 16d AT 16" o.c. MAX.
2. FASTEN STAIR STRINGERS TO LEDGER w/ A35 CLIP EA. SIDE
3. BEAM PER PLAN
4. BOUNDARY FASTENERS (10d AT 6" o.c. MAX.)

205 STAIR STRINGERS AT FLOOR FRAMING
N.T.S.

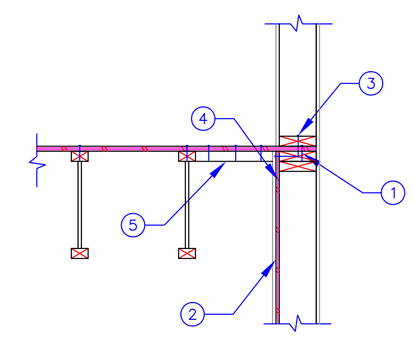

1. BOUNDARY FASTENERS (10d AT 6" o.c. MAX.)
2. WALL SHEATHING AND NAILING PER FRAMING PLAN NOTES OR SHEAR WALL SCHEDULE WHERE SHEAR WALL OCCURS ON PLAN
3. 16d AT 8" o.c. MAX.
4. FRAME WALL CONTINUOUS TO UNDERSIDE OF FLOOR SHEATHING
5. SOLID 2x BLOCKING AT 36" o.c. MAX. w/ (3) 10d FROM SHEATHING TO EA. BLOCK EVENLY SPACED

202 FLOOR JOIST AT STUD WALL
N.T.S.

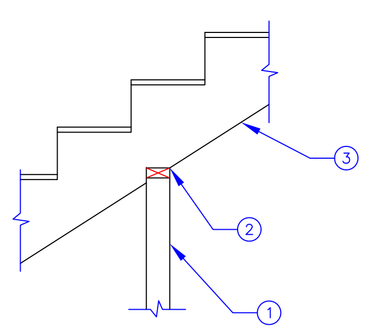

1. 2x4 BEARING STUD WALL AT MID-SPAN OF STAIR STRINGERS
2. BIRD'S MOUTH CUT STAIR STRINGERS AT STUD WALL
3. STAIR STRINGERS PER PLAN

207 STAIR STRINGERS AT BEARING WALL
N.T.S.

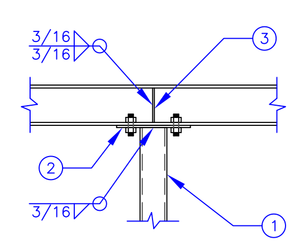

1. STEEL POST PER PLAN
2. 1/4" STEEL CAP w/ (4) 3/4" DIA. BOLTS ON BEAM GAUGE
3. ¼" THICK WEB STIFFENER PLATE EA. SIDE OF BEAM

204 STEEL BEAM AT STEEL POST
NTS

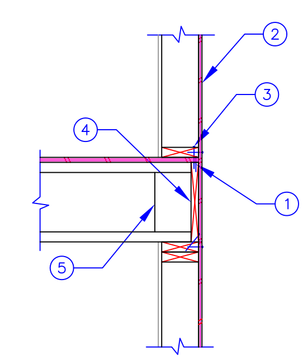

1. BOUNDARY FASTENERS (10d AT 6" o.c. MAX.)
2. WALL SHEATHING AND NAILING PER FRAMING PLAN NOTES OR SHEAR WALL SCHEDULE WHERE SHEAR WALL OCCURS ON PLAN
3. 16d AT 8" o.c. MAX. OR PER SHEAR WALL SCHEDULE WHERE SHEAR WALL OCCURS ON PLAN
4. CONT. RIM JOIST PER FRAMING PLAN NOTES w/ 16d TOENAILS AT 8" o.c. TO TOP PLATE BELOW
5. WEB STIFFENERS PER I-JOIST MFR. OR DESIGNER RECOMMENDATIONS

201 FLOOR JOIST AT STUD WALL
N.T.S.

DATE:	REVISION:
5/16/11	INITIAL DESIGN
	OWNER REVIEW
	CITY APPROVAL
	FOR CONSTRUCTION

KC FAIRGROUNDS BUILDING
FRAMING DETAILS
KANE COUNTY, UTAH

SCALE= NTS

REDUCE SCALE BY ½ FOR 11x17 DRAWINGS

TC ENGINEERING, PC
A "DESIGN-BUILD" FIRM
EXCELLENCE...ON TIME!
DANIEL W. THIEBEAU, P.E.
P.O. BOX 55, KANAB, UTAH 84741
(435)644-2031 (888)644-2031
(435)689-0155

DATE:	FILE:
MAY. 2011	KC
SHEET:	DRAWN BY:
S4.0	RMD

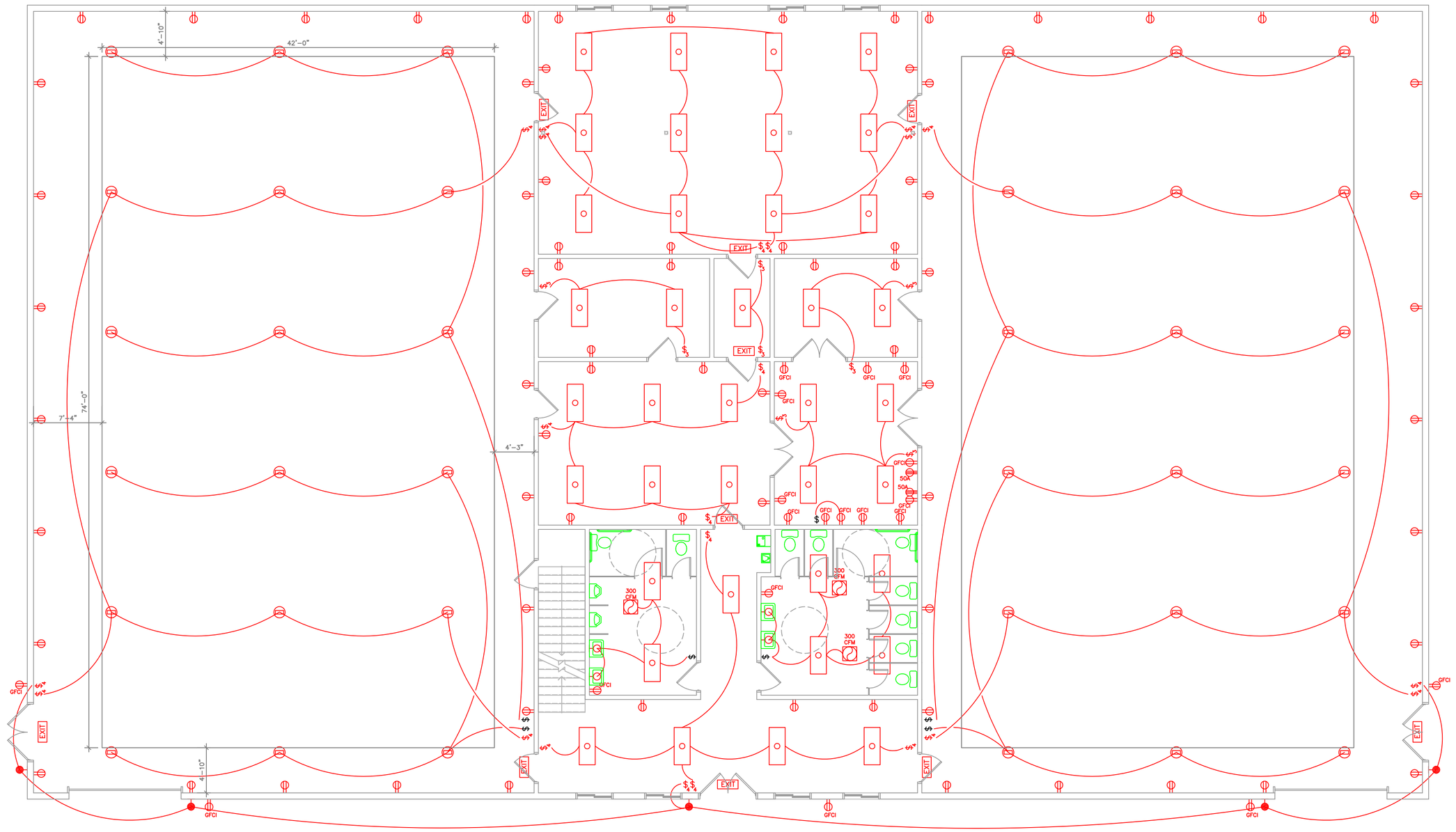

CIRCUIT BREAKER PANEL

VOLTS 120/208
PHASE 3 PHASE
WIRE 4 WIRE

LOCATION MAIN PANEL
FEEDER 150 A BUS, 150 A MAIN
CIRCUIT BREAKER TYPE

WIRE SIZE	FEED TYPE	SERVICE	A ø	B ø	C ø	AMP	BKR	BUSS	BKR	AMP	A ø	B ø	C ø	SERVICE	FEED TYPE	WIRE SIZE
12-2	EMT	LIGHTS – GYM 1	2400			20	1		2	20	1100			OUTLETS – GYM 1	EMT	12-2
12-2	EMT	LIGHTS – GYM 1		2400		20	3		4	20		1100		OUTLETS – GYM 1	EMT	12-2
12-2	EMT	LIGHTS – GYM 1			2400	20	5		6	20			1100	OUTLETS – GYM 2	EMT	12-2
12-2	EMT	LIGHTS – GYM 2	2400			20	7		8	20	1100			OUTLETS – GYM 2	EMT	12-2
12-2	EMT	LIGHTS – GYM 2		2400		20	9		10	20		2040		LARGE/SMALL CONF OUT	EMT	12-2
12-2	EMT	LIGHTS – GYM 2			2400	20	11		12	20			2400	LARGE/SMALL CONF OUT	EMT	12-2
14-2	EMT	CONF/STORAGE LIGHTS	1400			15	13		14	20	1100			KITCHEN OUTLETS	EMT	12-2
14-2	EMT	LOBBY/WALL PACK		800		15	15		16	20		1100		KITCHEN OUTLETS	EMT	12-2
14-2	EMT	KITCHEN/BATH LIGHTS			1550	15	17		18	20			1100	BATH/LOBBY OUTLETS	EMT	12-2
12-2	EMT	FRIDGE	600			20	19		20	20	1100			EXTERIOR OUTETS	EMT	12-2
		SPACE					21		22					SPACE		
		SPACE					23		24					SPACE		
		CONSTANT VOLT-AMPS	6200	5600	6350		(@125%) 22,688				0	0	0			
		NON-CONSTANT VOLTS	600	0	0		(@100%) 10,700				3300	3300	3500			
		NON-CONSTANT VOLTS	0	0	0		(@100%) 1,650				1100	1100	1100			

33,388 =97.25 AMPS
208*SQRT(3)

14) KITCHEN OUTLET LOCATION TO BE DETERMINED BY OWNER
16) KITCHEN OUTLET LOCATION TO BE DETERMINED BY OWNER
19) FRIDGE OUTLET LOCATION TO BE DETERMINED BY OWNER

CIRCUIT BREAKER PANEL

VOLTS 120/208
PHASE 3 PHASE
WIRE 4 WIRE

LOCATION MECHANICAL
FEEDER 150 A BUS, 150 A MAIN
CIRCUIT BREAKER TYPE

WIRE SIZE	FEED TYPE	SERVICE	A ø	B ø	C ø	AMP	BKR	BUSS	BKR	AMP	A ø	B ø	C ø	SERVICE	FEED TYPE	WIRE SIZE
							1		2							
12-2	EMT	RADIANT HEAT-GYM 1		500		20	3		4	20		500		RADIANT HEAT-GYM 2	EMT	12-2
							5		6	50			3800	HEAT PUMP	EMT	8-3
12-4	EMT	SWAMP – GYM 1	1600			20	7		8		3800					
				1600			9		10	30		3400		10kW AUX HEAT STRIP	EMT	10-4
					1600		11		12				3400			
12-4	EMT	SWAMP – GYM 1	1600			20	13		14		3400					
				1600			15		16	20		360		WATER HEATER/SOFTNER	EMT	12-2
					1600		17		18					SPACE		
		SPACE					19		20					SPACE		
		SPACE					21		22					SPACE		
		SPACE					23		24					SPACE		
		CONSTANT VOLT-AMPS	0	0	0		(@125%) 0				0	0	0			
		NON-CONSTANT VOLTS	3200	3700	3200		(@100%) 28,760				7200	4260	7200			
		NON-CONSTANT VOLTS	0	0	0		(@100%) 0				0	0	0			

28,760 =79.83 AMPS
208*SQRT(3)

3) RADIANT HEAT UNITS TO HAVE 120V DUPLEX PLUG INSTALLED ADJACENT TO EACH UNIT. LOCATION TO BE COODINATED WITH HVAC INSTALLER.
4) RADIANT HEAT UNITS TO HAVE 120V DUPLEX PLUG INSTALLED ADJACENT TO EACH UNIT. LOCATION TO BE COODINATED WITH HVAC INSTALLER.
6) FUSED DISCONNECT TO BE INSTALLED ADJACENT TO HVAC COMPRESSOR.
16) INSTALL ONE GFCI OUTLET FOR WATER SOFTNER AND WATER HEATER. SEE PLUMBING PLAN FOR LOCATION.

GENERAL NOTES:

1. ALL ELECTRICAL WORK SHALL BE IN ACCORDANCE WITH LOCAL BUILDING CODES AND THE LATEST EDITION OF THE NATIONAL ELECTRICAL CODE (NEC).
2. REFERENCE SPECIFICATION FOR CONSTRUCTION MATERIALS AND INSTALLATION PROCEDURES. SPECIFICATIONS ARE A PART OF THE CONSTRUCTION DOCUMENTS. SHOULD ANY CONFLICT ARISE BETWEEN THE DRAWINGS AND SPECIFICATIONS, SUCH CONFLICT SHALL BE BROUGHT TO THE ATTENTION OF THE ENGINEER FOR RESOLUTION.
3. THESE DRAWINGS ARE DIAGRAMMATIC IN CHARACTER AND DO NOT NECESSARILY SHOW MATERIALS FOR A COMPLETE INSTALLATION.
4. JUNCTION BOXES FOR LUMINARIES AND MECHANICAL EQUIPMENT ARE NOT INDICATED HERE ON. PROVIDE THE PROPER NUMBER OF J-BOXES TO MEET LOCAL CODE AND NEC.
5. ALL PENETRATIONS THROUGH FIRE SEPARATION WALLS SHALL BE SEALED TO MAINTAIN SEPARATION RATING.
6. SEE ARCHITECTURAL AND MECHANICAL PLANS ACTUAL FOR EQUIPMENT LOCATIONS.

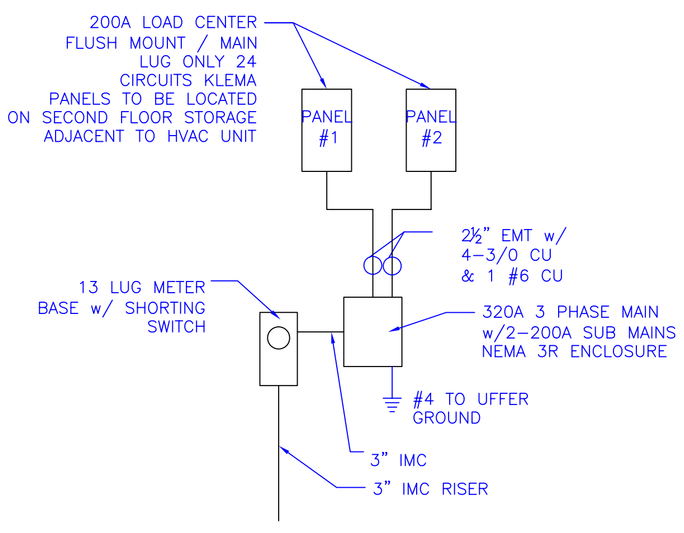

NOTE:
PVC RACEWAYS PERMITTED BELOW FLOOR.
PROVIDE UFER GROUND.

ELECTRICAL LEGEND:

- (4) 4' TUBE FLORESCENT LIGHT w/ ELECTRIC BALAST AND HARD COVER
- 350W MH LIGHT MOUNTED TO ROOF PERLIN (LITHONIA THA16 OR APPROVED EQUAL)
- 1700W MH WALL PAC WITH LIGHT SHIELD AND EMERGENCY POWER PACK BACK-UP @ 84"
- WALL MOUNTED LIGHT
- E — WALL MOUNTED BATTERY POWERED EMERGENCY EXIT FLOOD LIGHT
- 300 CFM EXHAUST FAN
- 120V DUPLEX
- GFCI 120V GFCI DUPLEX
- 50A 208V DUPLEX w/ AMPERAGE LOCATION TO BE DETERMINED BY OWNER

DATE:	REVISION:
5/16/11	INITIAL DESIGN
	OWNER REVIEW
	CITY APPROVAL
	FOR CONSTRUCTION

KC FAIRGROUNDS BUILDING
ELECTRICAL PLAN
KANE COUNTY, UTAH

SCALE= 1/8"=1'-0"
REDUCE SCALE BY ½ FOR 11x17 DRAWINGS

TC ENGINEERING, PC
A "DESIGN-BUILD" FIRM
EXCELLENCE....ON TIME!
DANIEL W. THEBEAU, P.E.
P.O. BOX 55, KANAB, UTAH 84741
(435)644-2031 (888)644-2031
(435)689-0155

DATE:	FILE:	DRAWN BY:
MAY. 2011	KC	TWA
SHEET:		
E1.0		

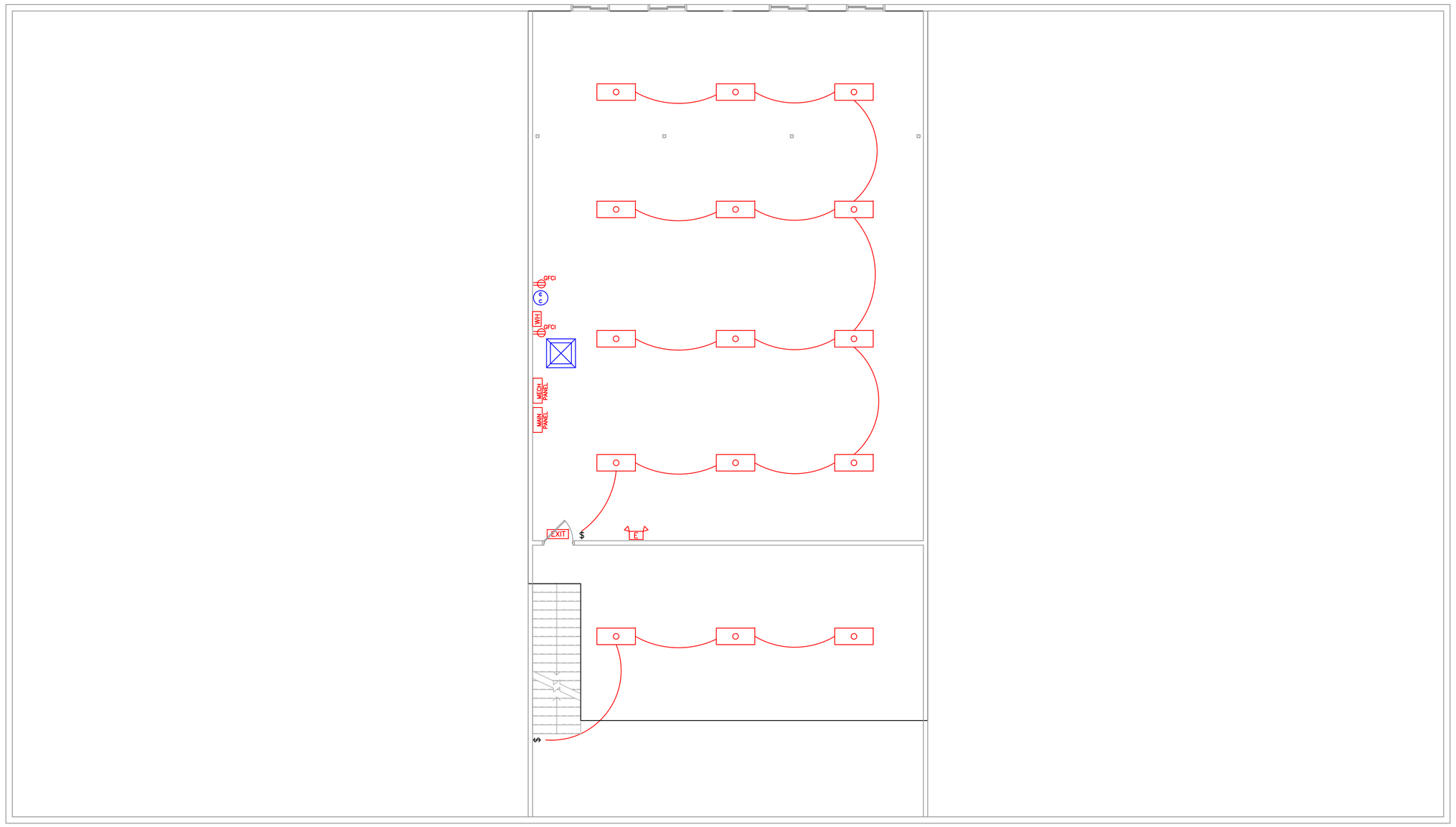

CIRCUIT BREAKER PANEL

VOLTS 120/208
PHASE 3 PHASE
WIRE 4 WIRE

LOCATION MAIN PANEL
FEEDER 200 A BUS, 200 A MAIN
CIRCUIT BREAKER TYPE

WIRE SIZE	FEED TYPE	SERVICE	A⌀	B⌀	C⌀	AMP	BKR	BUSS	BKR	AMP	A⌀	B⌀	C⌀	SERVICE	FEED TYPE	WIRE SIZE
12–2	EMT	LIGHTS – GYM 1	2400			20	1		2	20	1100			OUTLETS – GYM 1	EMT	12–2
12–2	EMT	LIGHTS – GYM 1		2400		20	3		4	20		1100		OUTLETS – GYM 1	EMT	12–2
12–2	EMT	LIGHTS – GYM 1			2400	20	5		6	20			1100	OUTLETS – GYM 2	EMT	12–2
12–2	EMT	LIGHTS – GYM 2	2400			20	7		8	20	1100			OUTLETS – GYM 2	EMT	12–2
12–2	EMT	LIGHTS – GYM 2		2400		20	9		10	20		2040		LARGE/SMALL CONF OUT	EMT	12–2
12–2	EMT	LIGHTS – GYM 2			2400	20	11		12	20			2400	LARGE/SMALL CONF OUT	EMT	12–2
14–2	EMT	CONF/STORAGE LIGHTS	1400			15	13		14	20	1100			KITCHEN OUTLETS	EMT	12–2
14–2	EMT	LOBBY/WALL PACK		800		15	15		16	20		1100		KITCHEN OUTLETS	EMT	12–2
14–2	EMT	KITCHEN/BATH LIGHTS			1550	15	17		18	20			1100	BATH/LOBBY OUTLETS	EMT	12–2
12–2	EMT	FRIDGE	600			20	19		20	20	1100			EXTERIOR OUTETS	EMT	12–2
		SPACE					21		22					SPACE		
		SPACE					23		24					SPACE		
		CONSTANT VOLT–AMPS	6200	5600	6350		(@125%) 22,688				0	0	0			
		NON–CONSTANT VOLTS	600	0	0		(@100%) 10,700			3300	3300	3500				
		NON–CONSTANT VOLTS	0	0	0		(@100%) 1,650			1100	1100	1100				

33,388 =97.25 AMPS
208*SQRT(3)

14) KITCHEN OUTLET LOCATION TO BE DETERMINED BY OWNER
16) KITCHEN OUTLET LOCATION TO BE DETERMINED BY OWNER
19) FRIDGE OUTLET LOCATION TO BE DETERMINED BY OWNER

CIRCUIT BREAKER PANEL

VOLTS 120/208
PHASE 3 PHASE
WIRE 4 WIRE

LOCATION MECHANICAL
FEEDER 200 A BUS, 200 A MAIN
CIRCUIT BREAKER TYPE

WIRE SIZE	FEED TYPE	SERVICE	A⌀	B⌀	C⌀	AMP	BKR	BUSS	BKR	AMP	A⌀	B⌀	C⌀	SERVICE	FEED TYPE	WIRE SIZE
							1		2							
12–2	EMT	RADIANT HEAT–GYM 1		500		20	3		4	20		500		RADIANT HEAT–GYM 2	EMT	12–2
							5		6	50			3800	HEAT PUMP	EMT	8–3
12–4	EMT	SWAMP – GYM 1	1600			20	7		8		3800					
				1600			9		10	30		3400		10kW AUX HEAT STRIP	EMT	10–4
					1600		11		12				3400			
12–4	EMT	SWAMP – GYM 1	1600			20	13		14		3400					
				1600			15		16	20		360		WATER HEATER/SOFTNER	EMT	12–2
					1600		17		18	20			1400	UPPER LIGHTS	EMT	12–2
		SPACE					19		20					SPACE		
		SPACE					21		22					SPACE		
		SPACE					23		24					SPACE		
		CONSTANT VOLT–AMPS	0	0	0		(@125%) 1,750				0	0	1400			
		NON–CONSTANT VOLTS	3200	3700	3200		(@100%) 28,760			7200	4260	7200				
		NON–CONSTANT VOLTS	0	0	0		(@100%) 0			0	0	0				

30,510 =84.69 AMPS
208*SQRT(3)

3) RADIANT HEAT UNITS TO HAVE 120V DUPLEX PLUG INSTALLED ADJACENT TO EACH UNIT. LOCATION TO BE COODINATED WITH HVAC INSTALLER.
4) RADIANT HEAT UNITS TO HAVE 120V DUPLEX PLUG INSTALLED ADJACENT TO EACH UNIT. LOCATION TO BE COODINATED WITH HVAC INSTALLER.
6) FUSED DISCONNECT TO BE INSTALLED ADJACENT TO HVAC COMPRESSOR.
16) INSTALL ONE GFCI OUTLET FOR WATER SOFTNER AND WATER HEATER. SEE PLUMBING PLAN FOR LOCATION.

GENERAL NOTES:

1. ALL ELECTRICAL WORK SHALL BE IN ACCORDANCE WITH LOCAL BUILDING CODES AND THE LATEST EDITION OF THE NATIONAL ELECTRICAL CODE (NEC).
2. REFERENCE SPECIFICATION FOR CONSTRUCTION MATERIALS AND INSTALLATION PROCEDURES. SPECIFICATIONS ARE A PART OF THE CONSTRUCTION DOCUMENTS. SHOULD ANY CONFLICT ARISE BETWEEN THE DRAWINGS AND SPECIFICATIONS, SUCH CONFLICT SHALL BE BROUGHT TO THE ATTENTION OF THE ENGINEER FOR RESOLUTION.
3. THESE DRAWINGS ARE DIAGRAMMATIC IN CHARACTER AND DO NOT NECESSARILY SHOW MATERIALS FOR A COMPLETE INSTALLATION.
4. JUNCTION BOXES FOR LUMINARIES AND MECHANICAL EQUIPMENT ARE NOT INDICATED HERE ON. PROVIDE THE PROPER NUMBER OF J–BOXES TO MEET LOCAL CODE AND NEC.
5. ALL PENETRATIONS THROUGH FIRE SEPARATION WALLS SHALL BE SEALED TO MAINTAIN SEPARATION RATING.
6. SEE ARCHITECTURAL AND MECHANICAL PLANS ACTUAL FOR EQUIPMENT LOCATIONS.

ELECTRICAL LEGEND:

- (4) 4' TUBE FLORESCENT LIGHT w/ ELECTRIC BALAST AND HARD COVER
- 350W MH LIGHT MOUNTED TO ROOF PERLIN (LITHONIA THA16 OR APPROVED EQUAL)
- 1700W MH WALL PAC WITH LIGHT SHIELD AND EMERGENCY POWER PACK BACK–UP @ 84"
- WALL MOUNTED LIGHT
- E — WALL MOUNTED BATTERY POWERED EMERGENCY EXIT FLOOD LIGHT
- 300 CFM EXHAUST FAN
- 120V DUPLEX
- GFCI 120V GFCI DUPLEX
- 50A 208V DUPLEX w/ AMPERAGE LOCATION TO BE DETERMINED BY OWNER

DATE:	REVISION:
5/16/11	INITIAL DESIGN
	OWNER REVIEW
	CITY APPROVAL
	FOR CONSTRUCTION

KC FAIRGROUNDS BUILDING
UPPER LIGHTING PLAN
KANE COUNTY, UTAH

SCALE= 1/8"=1'-0"
REDUCE SCALE BY ½ FOR 11x17 DRAWINGS

TC ENGINEERING, PC
A "DESIGN-BUILD" FIRM
EXCELLENCE...ON TIME!
DANIEL W. THEBEAU, P.E.
P.O. BOX 55, KANAB, UTAH 84741
(435)644-2031 (888)644-2031
(435)689-0155

DATE:	FILE:	DRAWN BY:
MAY. 2011	KC	TWA
SHEET:		
E2.0		

PLUMBING NOTES:

THE ENTIRE INSTALLATION SHALL CONFORM TO THE REQUIREMENTS OF THE MOST RECENTLY ADOPTED BUILDING CODE, MECHANICAL CODE, PLUMBING CODE, ELECTRICAL CODE, AND ALL OTHER APPLICABLE CITY, COUNTY, STATE AND FEDERAL CODES AND REGULATIONS IN EFFECT AT THE DATE OF CONSTRUCTION.

PRIOR TO FABRICATION AND INSTALLATION, COORDINATE THE INSTALLATION OF ALL PLUMBING WORK, AND EQUIPMENT WITH HVAC EQUIPMENT, HVAC DUCTWORK, FIRE PROTECTION PIPING AND ALL OTHER TRADES INCLUDING BUT NOT LIMITED TO: THE MECHANICAL CONTRACTOR, ELECTRICAL CONTRACTOR, AND ANY CONTRACTOR HIRED DIRECTLY BY THE OWNER. WHERE CONFLICTS MAY OCCUR, THEY SHALL BE RESOLVED PRIOR TO INSTALLATION.

THESE DRAWINGS SHOW THE GENERAL DESIGN, ARRANGEMENTS AND THE EXTENT OF THE SYSTEM. IT SHALL BE THE WORK OF THE CONTRACTOR TO MAKE SUCH SLIGHT ALTERATIONS AS MAY BE NECESSARY TO MAKE THE SYSTEM COMPLETE AND OPERATIONAL IN WITH THE DESIGN INTENT. MAJOR DEVIATIONS SUCH AS CHANGES IN COMPONENT SIZES, WEIGHTS, QUANTITIES, OR MATERIAL REQUIRE PRIOR APPROVAL BY THE CONSULTING ENGINEER.

THESE DRAWINGS ARE DIAGRAMMATIC, AND NOT ALL INFORMATION IS SHOWN ON THE PLUMBING DRAWINGS. THEY DO NOT SHOW EVERY OFFSET, BEND OR ELBOW NECESSARY FOR COMPLETE INSTALLATION. ALL LOCATIONS SHALL BE FIELD VERIFIED AND COORDINATED WITH ARCHITECTURAL, STRUCTURAL, MECHANICAL AND ELECTRICAL DRAWINGS.

ALL EQUIPMENT SHALL BE INSTALLED IN STRICT ACCORDANCE WITH THE EQUIPMENT MANUFACTURE'S RECOMMENDATIONS. PROVIDE ALL FITTINGS, AND OTHER DEVICES AND ACCESSORIES REQUIRED FOR A COMPLETE, WORKABLE INSTALLATION.

PROVIDE ALL LABOR, MATERIALS, AND EQUIPMENT NECESSARY TO CONSTRUCT A COMPLETE OPERATIONAL PLUMBING SYSTEM FOR THE ENTIRE PROJECT AS SHOWN ON THESE DRAWINGS, INCLUDING ALL NECESSARY INSPECTIONS, FEES, AND PERMITS.

UPON COMPLETION OF THE WORK, REMOVE ALL SURPLUS MATERIALS AND RUBBISH. MAKE ALL REQUIRED PATCHING AND REPAIRS OF OTHERS TRADES' WORK DAMAGED BY THE CONTRACTOR, AND LEAVE THE PREMISES IN A CLEAN, ORDERLY CONDITION.

THE PLUMBING CONTRACTOR SHALL OPERATE THE SYSTEM AND DEMONSTRATE ALL ASPECTS TO THE ENGINEER AND/OR OWNER, TO PROVE ITS OPERATION.

THE PLUMBING CONTRACTOR SHALL, DURING CONSTRUCTION, MAINTAIN A SET OF AS-BUILT REDLINED RECORD DRAWINGS AT THE PROJECT SITE. ALL CHANGES IN LAYOUT, ROUTING, EQUIPMENT, COMPONENTS, AND ACCESSORIES SHALL BE RECORDED. THESE REDLINES SHALL BE GIVEN TO THE ENGINEER AFTER THE FINAL INSPECTION.

THE PLUMBING CONTRACTOR SHALL GUARANTEE THE PLUMBING SYSTEM FOR A PERIOD OF ONE YEAR FROM THE DATE OF SUBSTANTIAL COMPLETION.

ALL WORK IS TO BE PERFORMED BY A LICENSED PLUMBER AND IN ACCORDANCE WITH THE IBC 2009 & IPC 2009

GAS PIPING TO BE SIZED TO ACCOMMODATE FUTURE NATURAL GAS

ALL FLOOR DRAINS TO HAVE TRAP PRIMERS

WATER HEATERS TO BE LOCATED 18" MIN ABOVE FINISHED FLOOR. FASTEN TO WALL w/ SEISMIC STRAPPING AT 1/3 DISTANCE FROM TOP AND BOTTOM w/ APPROVED SEISMIC STRAPPING. PROVIDE PAN AND DRAIN AT WATER HEATER

FIRST 8' OF HOT WATER OUTLET OF HOT WATER HEATERS TO HAVE ½" INSULATION

INSTALL TEMPERATURE LIMITING DEVICE FOR EACH WASH BASIN CONFORMING TO ASSE 1070.

PROVIDE LOW PRESSURE REGULATOR FOR GAS LINE AT WATER HEATER

PLUMBING FIXTURE SCHEDULE

SYM.	DESCRIPTION	CONNECTION SIZES W	V	C	H
	FLOOR DRAIN (FINISHED AREAS) COATED CAST IRON FLOOR DRAIN, TWO PIECE BODY, DOUBLE DRAINAGE FLANGE, BOTTOM NO-HUB OUTLET CONNECTION, 1/2" TRAP PRIMER, ADJUSTABLE SATIN BRONZE STRAINER, VANDAL PROOF SCREWS, INSTALL WITH TRAPGUARD PRO-SET TRAP SEAL	2"			
	FLOOR SINK-JOSAM49360A, 12"X10" DEEP CAST IRON BODY WITH ACID RESISTANT INTERIOR, DOUBLE DRAINAGE FLANGE, DOME STRAINER, WITH FULL GRATE, NO-HUB CONNECTION. INSTALL WITH TRAPGUARD PRO-SET SEAL.	2"	2"	3/4"	3/4"
	LAVATORY, WALL-HUNG, ADA COMPLIANT, AMERICAN STANDARD "LUCERNE" MODEL 0356, QHIRW CIREWOUA XHIN, 20-1/2" x 18-1/4" WITH 4" FAUCET CENTERS, 1-1/4" TAILPIECE, CHROM PLATED CAST BRASS ADJUSTABLE ADA COMPLIANT OFFSET 1-1/4" P-TRAP, 3/8" FLEXIBLE SUPPLIES, GRID STRAINER. FAUCET, SLOAN OPTIMA ETR-80-4 0.5 GPM, ADA COMPLIANT SENSOR OPERATED, BELOWDECK THERMOSTATIC MIXING VALVE, BOX MOUNT TRANSFORMER, 4" TRIM PLATE, INSULATE SUPPLY AND WASTE WITH TRUEBBROINC. INSULATION KIT. ALL COMPONENTS MUST COMPLY WITH ADA.	1-1/4"	1-1/4"	1/2"	1/2"
	URINAL WITH MANUAL FLUSHOMETER, WALL MOUNTED, LOW FLUSH 0.13 GPF ADA COMPLIANT, SLOAN WEUS-1000.1001-0.13, WHITE VITREOUS CHINA, 3/4" INLET TOP SPUD.	2"	1-1/4"	3/4"	
	WATER CLOSET, WALL MOUNTED, WALL OUTLET, HIGH EFFICENCY, 1.28 GPF, FLUSH VALVE, AMERICAN STANDARD "AFWALL•MODEL 3351, WHITE VITREOUS CHINA, SIPHON JET ELONGATED RIMBOWL WITH 1 1/2" TOP SPUD. 5901.100 OPEN FRONT SEAT LESS COVER, CARRIER AS REQUIRED BOLTED TO FLOOR. FLUSH VALVE, SLOAN ROYAL 1113-1.28 MANUAL OPERATION, ADA COMPIANT AS REQUIRED	2"	2"	1-1/4"	
WH	INTANTANEOUS WATER HEATER, RINNAI RC98HPI-LP	PLAN			
	2" HAMMER ARRESTOR			2"	
	DRINKING FOUNTAIN, HI-LO ADA, HAWS MODEL 1001, BARRIER FREE, 18 GUAGE, TYPE 304 SS SATIN FINISH, ROUND SCULPED BOWL, AJUSTABLE VALVE, NSF 61, MOUNT BUBBLER AT 39"/34"	1-1/4"	1-1/4"	1/2"	
C C	WATER SOFTNER, CULLIGAN HC-150-1.5T HI-FLO 3 SERIES WATER SOFTNER (OR APPROVED EQUAL).			1"	
	BALL VALVE	PLAN			
	WALL HYDRANT, FREEZE-PROOF, WOODFORD MODEL B65, VACUUMBREAKER, CHROME PLATED BRASS BODY, SURFACE MOUNT WITH LOOSE TEE KEY.			3/4"	
GD-1	GARBAGE DISPOSER, IN-SINK-ERATOR BADGER 5XP, COUNTINOUSFEED, STANLESS STEEL GRINDING ELEMENTS AND SWIVEL LUGS, 3/4 HP, 8.1 AMPS, 115 V, 1 PH.				
	COUNTER SINK, EAGLE FOODSERVICE MODEL SR10-14-9.5-3 OR APPROVED EQUAL, 18 GUAGE 18-7/8" X 36-1/4", THREE HOLE PUNCH, 4" CENTERS, 1-1/2" 17 GUAGE PLATED P-TRAP WITH CLEAN-OUT, CHROME PLATED FLEXIBLE ANGLE SUPPLIES WITH KEYED STOPS. FAUCET #300490 WITH 12" SPOUT. INSULATE SUPPLY AND WAST WITH TRUEBRO INC. INSULATION KIT.	1-1/2"	1-1/4"	1/2"	1/2"

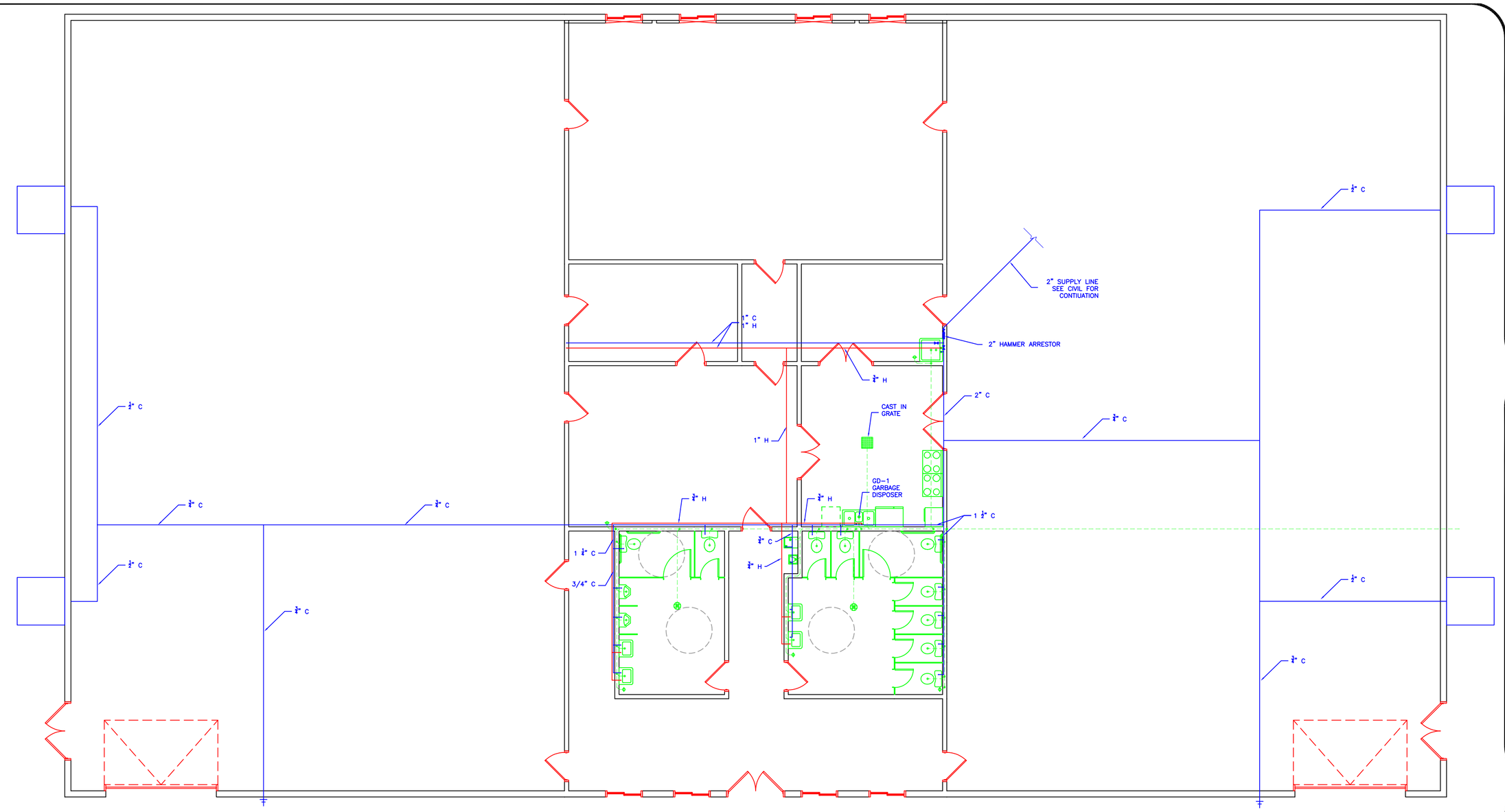

MAIN FLOOR PLUMBING LAYOUT
1/8" = 1'-0"

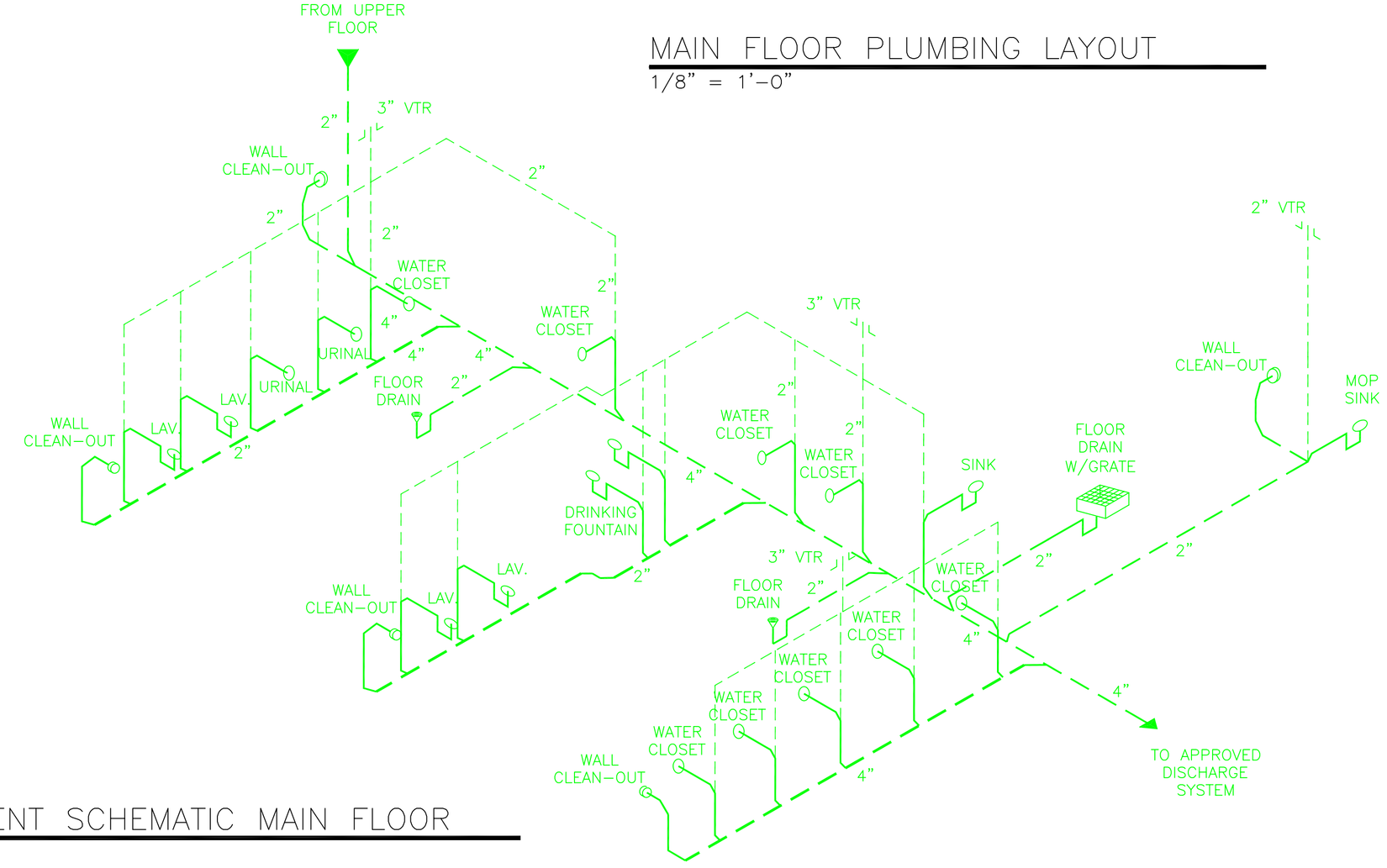

WASTE/VENT SCHEMATIC MAIN FLOOR
NTS

DATE:	REVISION:
5/16/11	INITIAL DESIGN
	OWNER REVIEW
	CITY APPROVAL
	FOR CONSTRUCTION

KC FAIRGROUNDS BUILDING
PLUMBING PLAN
KANE COUNTY, UTAH

SCALE= 1/4"=1'-0"
REDUCE SCALE BY ½ FOR 11x17 DRAWINGS

TC ENGINEERING, PC
A "DESIGN-BUILD" FIRM
EXCELLENCE...ON TIME!
DANIEL W. THEBEAU, P.E.
P.O. BOX 55, KANAB, UTAH 84741
(435)644-2031 (888)644-2031
(435)689-0155

DATE:	FILE:
MAY. 2011	KC
SHEET:	DRAWN BY:
P1.0	RMD

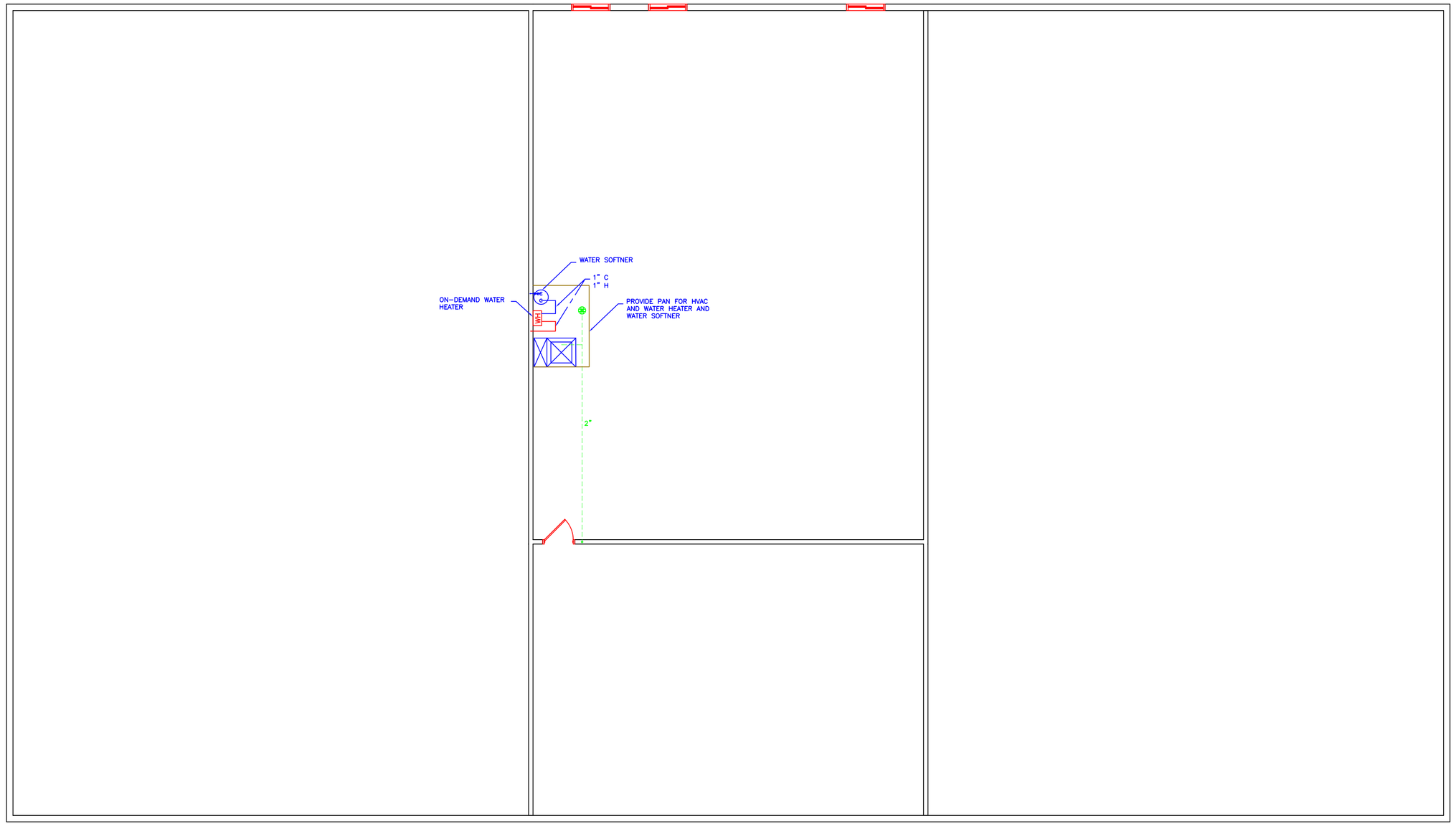

UPPER FLOOR PLUMBING LAYOUT

1/8" = 1'-0"

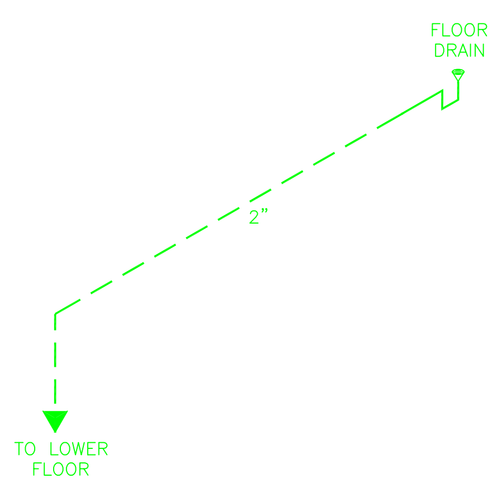

WASTE/VENT SCHEMATIC UPPER FLOOR

NTS

PLUMBING NOTES:

THE ENTIRE INSTALLATION SHALL CONFORM TO THE REQUIREMENTS OF THE MOST RECENTLY ADOPTED BUILDING CODE, MECHANICAL CODE, PLUMBING CODE, ELECTRICAL CODE, AND ALL OTHER APPLICABLE CITY, COUNTY, STATE AND FEDERAL CODES AND REGULATIONS IN EFFECT AT THE DATE OF CONSTRUCTION.

PRIOR TO FABRICATION AND INSTALLATION, COORDINATE THE INSTALLATION OF ALL PLUMBING WORK, AND EQUIPMENT WITH HVAC EQUIPMENT, HVAC DUCTWORK, FIRE PROTECTION PIPING AND ALL OTHER TRADES INCLUDING BUT NOT LIMITED TO: THE MECHANICAL CONTRACTOR, ELECTRICAL CONTRACTOR, AND ANY CONTRACTOR HIRED DIRECTLY BY THE OWNER. WHERE CONFLICTS MAY OCCUR, THEY SHALL BE RESOLVED PRIOR TO INSTALLATION.

THESE DRAWINGS SHOW THE GENERAL DESIGN, ARRANGEMENTS AND THE EXTENT OF THE SYSTEM. IT SHALL BE THE WORK OF THE CONTRACTOR TO MAKE SUCH SLIGHT ALTERATIONS AS MAY BE NECESSARY TO MAKE THE SYSTEM COMPLETE AND OPERATIONAL IN WITH THE DESIGN INTENT. MAJOR DEVIATIONS SUCH AS CHANGES IN COMPONENT SIZES, WEIGHTS, QUANTITIES, OR MATERIAL REQUIRE PRIOR APPROVAL BY THE CONSULTING ENGINEER.

THESE DRAWINGS ARE DIAGRAMMATIC, AND NOT ALL INFORMATION IS SHOWN ON THE PLUMBING DRAWINGS. THEY DO NOT SHOW EVERY OFFSET, BEND OR ELBOW NECESSARY FOR COMPLETE INSTALLATION. ALL LOCATIONS SHALL BE FIELD VERIFIED AND COORDINATED WITH ARCHITECTURAL, STRUCTURAL, MECHANICAL AND ELECTRICAL DRAWINGS.

ALL EQUIPMENT SHALL BE INSTALLED IN STRICT ACCORDANCE WITH THE EQUIPMENT MANUFACTURE'S RECOMMENDATIONS. PROVIDE ALL FITTINGS, AND OTHER DEVICES AND ACCESSORIES REQUIRED FOR A COMPLETE, WORKABLE INSTALLATION.

PROVIDE ALL LABOR, MATERIALS, AND EQUIPMENT NECESSARY TO CONSTRUCT A COMPLETE OPERATIONAL PLUMBING SYSTEM FOR THE ENTIRE PROJECT AS SHOWN ON THESE DRAWINGS, INCLUDING ALL NECESSARY INSPECTIONS, FEES, AND PERMITS.

UPON COMPLETION OF THE WORK, REMOVE ALL SURPLUS MATERIALS AND RUBBISH. MAKE ALL REQUIRED PATCHING AND REPAIRS OF OTHERS TRADES' WORK DAMAGED BY THE CONTRACTOR, AND LEAVE THE PREMISES IN A CLEAN, ORDERLY CONDITION.

THE PLUMBING CONTRACTOR SHALL OPERATE THE SYSTEM AND DEMONSTRATE ALL ASPECTS TO THE ENGINEER AND/OR OWNER, TO PROVE ITS OPERATION.

THE PLUMBING CONTRACTOR SHALL, DURING CONSTRUCTION, MAINTAIN A SET OF AS-BUILT REDLINED RECORD DRAWINGS AT THE PROJECT SITE. ALL CHANGES IN LAYOUT, ROUTING, EQUIPMENT, COMPONENTS, AND ACCESSORIES SHALL BE RECORDED. THESE REDLINES SHALL BE GIVEN TO THE ENGINEER AFTER THE FINAL INSPECTION.

THE PLUMBING CONTRACTOR SHALL GUARANTEE THE PLUMBING SYSTEM FOR A PERIOD OF ONE YEAR FROM THE DATE OF SUBSTANTIAL COMPLETION.

ALL WORK IS TO BE PERFORMED BY A LICENSED PLUMBER AND IN ACCORDANCE WITH THE IBC 2009 & IPC 2009

GAS PIPING TO BE SIZED TO ACCOMMODATE FUTURE NATURAL GAS

ALL FLOOR DRAINS TO HAVE TRAP PRIMERS

WATER HEATERS TO BE LOCATED 18" MIN ABOVE FINISHED FLOOR. FASTEN TO WALL w/ SEISMIC STRAPPING AT 1/3 DISTANCE FROM TOP AND BOTTOM w/ APPROVED SEISMIC STRAPPING. PROVIDE PAN AND DRAIN AT WATER HEATER

FIRST 8' OF HOT WATER OUTLET OF HOT WATER HEATERS TO HAVE ½" INSULATION

INSTALL TEMPERATURE LIMITING DEVICE FOR EACH WASH BASIN CONFORMING TO ASSE 1070.

PROVIDE LOW PRESSURE REGULATOR FOR GAS LINE AT WATER HEATER

PLUMBING FIXTURE SCHEDULE

SYM.	DESCRIPTION	CONNECTION SIZES			
		W	V	C	H
	FLOOR DRAIN (FINISHED AREAS) COATED CAST IRON FLOOR DRAIN, TWO PIECE BODY, DOUBLE DRAINAGE FLANGE, BOTTOM NO-HUB OUTLET CONNECTION, 1/2" TRAP PRIMER, ADJUSTABLE SATIN BRONZE STRAINER, VANDAL PROOF SCREWS, INSTALL WITH TRAPGUARD PRO-SET TRAP SEAL	2"			
	FLOOR SINK-JOSAM49360A, 12"X10" DEEP CAST IRON BODY WITH ACID RESISTANT INTERIOR, DOUBLE DRAINAGE FLANGE, DOME STRAINER, WITH FULL GRATE, NO-HUB CONNECTION. INSTALL WITH TRAPGUARD PRO-SET SEAL.	2"	2"	3/4"	3/4"
	LAVATORY, WALL-HUNG, ADA COMPLIANT, AMERICAN STANDARD "LUCERNE" MODEL 0356, QHIRW CIREWOUA XHIN, 20-1/2" x 18-1/4" WITH 4" FAUCET CENTERS, 1-1/4" TAILPIECE, CHROM PLATED CAST BRASS ADJUSTABLE ADA COMPLIANT OFFSET 1-1/4" P-TRAP, 3/8" FLEXIBLE SUPPLIES, GRID STRAINER. FAUCET, SLOAN OPTIMA ETR-80-4 0.5 GPM, ADA COMPIANT SENSOR OPERATED, BELOWDECK THERMOSTATIC MIXING VALVE, BOX MOUNT TRANSFORMER, 4" TRIM PLATE. INSULATE SUPPLY AND WASTE WITH TRUEEBROINC. INSULATION KIT. ALL COMPONENTS MUST COMPLY WITH ADA.	1-1/4"	1-1/4"	1/2"	1/2"
	URINAL WITH MANUAL FLUSHOMETER, WALL MOUNTED, LOW FLUSH 0.13 GPF ADA COMPLIANT, SLOAN WEUS-1000.1001-0.13, WHITE VITREOUS CHINA, 3/4" INLET TOP SPUD.	2"	1-1/4"	3/4"	
	WATER CLOSET, WALL MOUNTED, WALL OUTLET, HIGH EFFICENCY, 1.28 GPF, FLUSH VALVE, AMERICAN STANDARD "APWALL"MODEL 3351, WHITE VITREOUS CHINA, SIPHON JET ELONGATED RIMBOWL WITH 1 1/2" TOP SPUD. 5901.100 OPEN FRONT SEAT LESS COVER, CARRIER AS REQUIRED BOLTED TO FLOOR. FLUSH VALVE, SLOAN ROYAL 1113-1.28 MANUAL OPERATION, ADA COMPIANT AS REQUIRED	2"	2"	1-1/4"	
WH	NTANTANEOUS WATER HEATER, RINNAI RC98HPI-LP	PLAN			
	2" HAMMER ARRESTOR			2"	
	DRINKING FOUNTAIN, HI-LO ADA, HAWS MODEL 1001, BARRIER FREE, 18 GUAGE, TYPE 304 SS SATIN FINISH, ROUND SCULPED BOWL, AJUSTABLE VALVE, NSF 61, MOUNT BUBBLER AT 39"/34"	1-1/4"	1-1/4"	1/2"	
C C	WATER SOFTNER, CULLIGAN HC-150-1.5T HI-FLO 3 SERIES WATER SOFTNER (OR APPROVED EQUAL).			1"	
	BALL VALVE	PLAN			
	WALL HYDRANT, FREEZE-PROOF, WOODFORD MODEL B65, VACUUMBREAKER, CHROME PLATED BRASS BODY, SURFACE MOUNT WITH LOOSE TEE KEY.			3/4"	
GD-1	GARBAGE DISPOSER, IN-SINK-ERATOR BADGER 5XP, COUNTINOUSFEED, STANLESS STEEL GRINDING ELEMENTS AND SWIVEL LUGS, 3/4 HP, 8.1 AMPS, 115 V, 1 PH.				
	COUNTER SINK, EAGLE FOODSERVICE MODEL SR10-14-9.5-3 OR APPROVED EQUAL, 18 GUAGE 18-7/8" X 36-1/4", THREE HOLE PUNCH, 4" CENTERS, 1-1/2" 17 GUAGE PLATED P-TRAP WITH CLEAN-OUT, CHROME PLATED FLEXIBLE ANGLE SUPPLIES WITH KEYED STOPS. FAUCET #300490 WITH 12" SPOUT. INSULATE SUPPLY AND WAST WITH TRUEBRO INC. INSULATION KIT.	1-1/2"	1-1/4"	1/2"	1/2"

DATE:	REVISION:
5/16/11	INITIAL DESIGN
	OWNER REVIEW
	CITY APPROVAL
	FOR CONSTRUCTION

KC FAIRGROUNDS BUILDING
PLUMBING PLAN
KANE COUNTY, UTAH

SCALE= 1/4"=1'-0"

REDUCE SCALE BY ½ FOR 11x17 DRAWINGS

TC ENGINEERING, PC
A "DESIGN-BUILD" FIRM
EXCELLENCE....ON TIME!
DANIEL W. THEBEAU, P.E.
P.O. BOX 55, KANAB, UTAH 84741
(435)644-2031 (888)644-2031
(435)689-0155

DATE:	FILE:
MAY. 2011	KC
SHEET:	DRAWN BY:
P2.0	RMD

BASIC MATERIALS AND METHODS

1. SLEEVE ALL PENETRATIONS THROUGH NEW WALLS AND FLOORS. SEAL ALL PENETRATIONS WATER TIGHT WITH SILICONE SEALANT.
2. SEAL ALL DUCTS THROUGH WALLS AIR TIGHT.

MECHANICAL IDENTIFICATION

1. DUCT MARKERS:
   PROVIDE MANUFACTURE'S STANDARD LAMINATED PLASTIC; COLOR CODED DUCT MARKERS
2. COLOR:
   COMPLY WITH ANSI A13.1.
3. LETTERING:
   MANUFACTURE'S STANDARD PRE-PRINTED NOMENCLATURE WHICH BEST DESCRIBES PIPING OR DUCT SYSTEM IN EACH INSTANCE OR AS SELECTED BY ARCHITECT OR ENGINEER IN CASES OF VARIANCE WITH NAMES AS SHOWN.
4. ARROWS:
   PRINT EACH MARKER WITH ARROWS INDICATING DIRECTION OF FLOW.

VIBRATION ISOLATION, SOUND ISOLATION & SEISMIC BRACING

1. ALL MECHANICAL EQUIPMENT, DUCTWORK, AND PIPING MUST BE VIBRATION ISOLATED AND SEISMIC ALLY BRACED FOR THE SITE SPECIFIC SEISMIC DESIGN CATEGORY AND SEISMIC USE GROUP, IN ACCORDANCE WITH THE LATEST ADOPTED EDITIONS OF THE BUILDING CODES, ASHRAE, AND SMACNA. PROVIDE SEISMIC PRODUCTS BY AMBER-BOOTH OR MASON INDUSTRIES.
2. IN GENERAL, PROVIDE SPRING MOUNTS TO ATTENUATE LOW FREQUENCY SOUND AND VIBRATION AND NEOPRENE PADS TO ATTENUATE HIGH FREQUENCY SOUND AND VIBRATION. SEISMIC BRACING/MOUNTING CAN BE COMBINED WITH VIBRATION ISOLATION AS APPLICABLE.
3. CONTRACTOR MANUFACTURED SEISMIC BRACING/RESTRAINT METHODS ARE NOT ACCEPTABLE. PROVIDE A SIGNED AND STAMPED LETTER FROM A PROFESSIONAL ENGINEER CERTIFYING THAT THE SUPPLIED PRODUCTS ARE CORRECT FOR THE APPLICATION AND THAT THE INSTALLATION IS IN COMPLIANCE WITH ALL APPLICABLE CODES.

INSULATION

1. WRAP ALL ROUND SUPPLY AND RETURN DUCTWORK WITH 1-1/2" THICK FOIL FACED FIBERGLASS INSULATION. WRAP INSULATION TIGHTLY ON THE DUCT WITH ALL CIRCUMFERENTIAL JOINTS BUTTED AND LONGITUDINAL JOINTS OVERLAPPED A MIN. OF 2" COVER ALL JOINTS WITH FOIL-REINFORCED "KRAFT" TAPE, 3" WIDE.
2. OUTDOOR DUCTWORK EXPOSED TO THE WEATHER SHALL HAVE 2" INSULATION AND SHALL BE FITTED WITH 0.016 EMBOSSED ALUMINUM JACKET POP-RIVETED FOR A TIGHT WEATHERPROOF FIT.
3. SEE METAL DUCTWORK SECTION FOR LINED RECTANGULAR DUCTWORK.

HEATING AND COOLING UNITS

1. UNITS SHALL BE FACTORY ASSEMBLED AND TESTED, DESIGNED FOR ROOF OR SLAB INSTALLATION, AND CONSISTING OF HEAT EXCHANGER, COMPRESSORS, CONDENSERS, EVAPORATOR COILS, CONDENSER AND EVAPORATOR FANS, REFRIGERATION AND TEMPERATURE CONTROLS, FILTERS AND DAMPERS AS REQUIRED.
2. HEAT PUMPS:
   PROVIDE COMPLETELY AUTOMATIC CHANGEOVER CONTROLS.
3. PROVIDE ANY ROOF TOP UNITS WITH ROOF CURB, ECONOMIZER CONNECTION (NO RELIEF), HIGH AND LOW PRESSURE CUTOUTS, 5 YEAR MIN WARRANTY, AND ONE EXTRA SET OF BELTS AND FILTERS.
4. PROVIDE A COPPER P-TRAP ON ALL ROOFTOP CONDENSATE DRAIN PANS, SIZED THE SAME AS THE OUTLET SIZE OF THE MANUFACTURE'S DRAIN PAN. DRAIN CONDENSATE TO ROOF UNLESS NOT ALLOWED BY LOCAL CODES. PROVIDE A 6" SQUARE (MINIMUM) CONCRETE SPLASH BLOCK UNDERNEATH THE DRAIN OUTLET, WITH A 1" MINIMUM AIR GAP.
5. PROVIDE FACTORY INSTALLED AND WIRED SMOKE DETECTOR IN SUPPLY AND RETURN AIR STEAM FOR ALL UNITS OF 2,000 CFM AND LARGER CAPACITY. UNIT SHALL SHUT DOWN AUTOMATICALLY UPON DETECTION OF SMOKE.

GRILLES, DIFFUSER AND LOUVERS

1. ALL GRILLES, DIFFUSERS, AND REGISTERS SHALL BE COMPLETE WITH FRAMES AND RUBBER GASKETS. FINISH FOR ALL REGISTERS, DIFFUSERS, AND GRILLES SHALL BE WHITE.
2. COORDINATE THE LOCATIONS OF ALL CEILING DIFFUSERS, REGISTERS, AND GRILLES WITH THE ARCHITECTURAL REFLECTED CEILING PLAN, ELECTRICAL LIGHTING LAYOUT, AND ARCHITECTURAL ELEVATIONS
3. LOUVERS SHALL HAVE MINIMUM FREE AREA AND MAXIMUM PRESSURE DROP. LOUVER SHALL HAVE FRAME AND SILLS COMPATIBLE WITH ADJACENT SUBSTRATE AND FIT ACCURATELY FOR WEATHERPROOF INSTALLATION. LOUVERS SHALL BE COMPLETE WITH ½" MESH ANODIZED ALUMINUM BIRD SCREEN.

METAL DUCTWORK

1. ALL DUCTWORK SHALL BE CONSTRUCTED, ERECTED, AND TESTED IN ACCORDANCE WITH THE MOST RESTRICTIVE OF LOCAL REGULATIONS AND PROCEDURES DETAILED IN THE ASHRAE HANDBOOK OF FUNDAMENTALS, OR THE APPLICABLE STANDARDS ADOPTED BY THE SHEET METAL AND AIR CONDITIONING CONTRACTOR'S NATIONAL ASSOCIATION, (SMACNA).
2. TRANSITION ALL NEW DUCTWORK TO CONNECT TO OTHER DUCTWORK AND EQUIPMENT, AS REQUIRED.
3. DUCTWORK SHALL BE GALVANIZED STEEL THROUGHOUT, FABRICATED AND INSTALLED SO THAT NO VIBRATION OR NOISE RESULTS. IT SHALL BE MADE FROM THE BEST GRADE OF GALVANIZED MILLED STEEL SHEETS OF U.S. STANDARD GAUGE AND BE FREE FROM BLISTERS, SLIVERS, AND PITS. ALL SEAMS SHALL BE AIRTIGHT, THE CONSTRUCTION OF ALL DUCTWORK, INCLUDING GAUGES OF METAL, BRACING LAYOUT, ETC., SHALL BE IN ACCORDANCE WITH SMACNA. SLEEVES FOR FIRE DAMPERS AND DUCT SECTIONS FORMING AN EXTENSION OF THE FIRE WALL SHALL BE 10 GAUGE STEEL, WHERE APPLICABLE.
4. SEAL DUCTWORK ACCORDING TO THE FOLLOWING SMACNA DUCT SEALING CLASS:

DUCT LOCATION	DUCT TYPE			
	SUPPLY		EXHAUST	RETURN
	<2in. Wg	>2in. Wg		
OUTDOORS	A	A	A	A
UNCONDITIONED SPACES	B	A	B	B
CONDITIONED SPACES	C	B	B	B
(CONCEALED DUCTWORK) CONDITIONED SPACES (EXPOSED DUCTWORK)	A	A	B	B

5. HANGERS FOR DUCTS UP TO 18" IN WIDTH OR DIAMETER SHALL BE PLACED ON NOT MORE THAN 8 FOOT CENTERS. DUCTS 19" AND OVER IN WIDTH OR DIAMETER SHALL BE SUPPORTED ON NOT MORE THAN 4 FOOT CENTERS. DUCT HANGERS SHALL BE CONSTRUCTED OF GALVANIZED BAND IRON 1-1/8" FOR DUCTS UP TO 36" IN WIDTH OR DIAMETER. HANGERS SHALL EXTEND DOWN SIDES AND A MINIMUM OF 1" UNDER RECTANGULAR DUCTS, AND WRAP COMPLETELY AROUND ROUND DUCTS. ALL DUCTS SHALL BE RIGIDLY SUPPORTED.
6. ALL DUCTWORK SHALL BE CLEANED PRIOR TO THE INSTALLATION OF CEILING, DIFFUSERS AND GRILLES. OPERATE FANS TO BLOW OUT DUCTWORK.
7. RECTANGULAR LOW-PRESSURE SUPPLY AND RETURN AIR DUCTWORK SHALL BE LINED WITH 1" FACED FIBERGLASS INSULATION SECURELY BUTTONED OR LAPPED AND SEALED. INSULATION SHALL BE 1-1/2 POUND DENSITY.
8. OUTDOOR DUCTWORK EXPOSED TO THE WEATHER SHALL BE WRAPPED WITH A MINIMUM R-5 FACED FIBERGLASS INSULATION SECURELY BUTTONED OR LAPPED AND SEALED, AND SHALL BE FITTED WITH A 0.016 EMBOSSED ALUMINUM JACKET POP RIVETED FOR A WEATHERPROOF FIT.
9. DUCT DIMENSIONS SHOW ON DRAWINGS ARE INSIDE CLEAR AREA AND SHALL BE INCREASED TO ACCOMMODATE INSULATION.

DUCTWORK ACCESSORIES

1. FLEXIBLE DUCTWORK:
   THE FINAL 5 FOOT CONNECTION TO GRILLES AND DIFFUSERS IN LAY-IN CEILINGS OR TO FLOOR MOUNTED GRILLES, MAY BE MADE WITH FLEXIBLE DUCT, FLEXMASTER TYPE 5M ONLY. ENDS SHALL BE SEALED.
2. SQUARE/RETANCULAR ELBOWS SHALL BE PROVIDED WITH TURNING VANES.
3. ALL DUCT BRANCHES AND TAKEOFFS SHALL BE HIGH-EFFICIENCY TYPES, WITH DUCT MOUNTED BALANCING DAMPERS.
4. PROVIDE FLEXIBLE CONNECTIONS NOT LESS THAN 4" WIDE CONSTRUCTED OF HEAVY, WATERPROOF, WOVEN PLASTIC COATED CLASS FABRIC AT SUPPLY AND RETURN CONNECTIONS TO FURNACES, AIR HANDLING, ROOFTOP, MAKE-UP AIR OR FAN-COIL UNITS. CORNERS SHALL BE SEWN TIGHT. CONNECTIONS SHALL BE 20 OUNCE VENT FABRICS OR EQUAL.
5. DUCT MOUNTED BALANCING DAMPERS SHALL BE USED TO CONTROL SUPPLY, RETURN OR EXHAUST AIR TO EACH DIFFUSER AND GRILLE. AN OPERATING HEAD SHALL BE PLACED ON THE SIDE OF THE DUCT WITH A POSITIVE LOCKING QUADRANT. DAMPERS SHALL BE PROVIDED IN RETURN AND EXHAUST AIR DUCTS WHERE SHOWN ON DRAWINGS.
6. PROVIDE DAMPER OPERATOR EXTENSIONS THROUGH ALL SHEET ROCK OR OTHER HARD CEILINGS. YOUNG REGULATOR MODEL 315 OR EQUAL.

AUTOMATIC TEMPERATURE CONTROL SYSTEM

1. BUILDING HVAC CONTROL SYSTEM:
   THERMOSTATS SHALL BE CARRIER INFINITY CONTROL PROGRAMMABLE THERMOSTAT OR EQUAL

MECHANICAL SPECIFICATIONS

1. BALANCE AND ADJUST THE SYSTEM. THIS SHALL BE DONE BY PERSONS FULLY FAMILIAR WITH SYSTEMS OF THIS TYPE. BALANCING SHALL BE DONE IN ACCORDANCE TO AABC OR NEBB STANDARDS. ALL DATA SHALL BE RECORDED AND A REPORT SUBMITTED TO THE ENGINEER PRIOR TO JOB CLOSE OUT.

ABBR.	SYMBOL	DESCRIPTION
SA		POSITIVE PRESSURE DUCT UP
SA		POSITIVE PRESSURE DUCT DOWN
EA/RA		NEGATIVE PRESSURE DUCT UP
EA/RA		NEGATIVE PRESSURE DUCT DOWN
OA		OUTSIDE AIR INTAKE DUCT UP
OA		OUTSIDE AIR INTAKE DUCT DOWN
		ROUND DUCT UP
		ROUND DUCT DOWN
		CONICAL FITTING WITH DAMPER
		ECCENTRIC FITTING WITH DAMPER
		CONICAL FITTING WITHOUT DAMPER
		ECCENTRIC FITTING WITHOUT DAMPER
		ELBOW WITH TURNING VANES
		ELBOW WITHOUT TURNING VANES
		SUPPLY DIFFUSER
		RETURN AIR GRILLE
		FLEXDUCT
		DUCTWORK
MVD		MANUAL VOLUME DAMPER
- GRAPHIC SYMBOLS -		
	1	KEY NOTE
	1	REVISION NUMBER
	TYP CFM	DIFFUSER, REGISTER, GRILLE CFM CALLOUT

DATE:	REVISION:
5/16/11	INITIAL DESIGN
	OWNER REVIEW
	CITY APPROVAL
	FOR CONSTRUCTION

KC FAIRGROUNDS BUILDING
MECHANICAL PLAN
KANE COUNTY, UTAH
SCALE= 1/4"=1'-0"
REDUCE SCALE BY ½ FOR 11x17 DRAWINGS

TC ENGINEERING, PC
A "DESIGN-BUILD" FIRM
EXCELLENCE...ON TIME!
DANIEL W. THEBEAU, P.E.
P.O. BOX 55, KANAB, UTAH 84741
(435)644-2031 (888)644-2031
(435)689-0155

DATE:	FILE:
MAY. 2011	KC
SHEET:	DRAWN BY:
M0.1	RMD

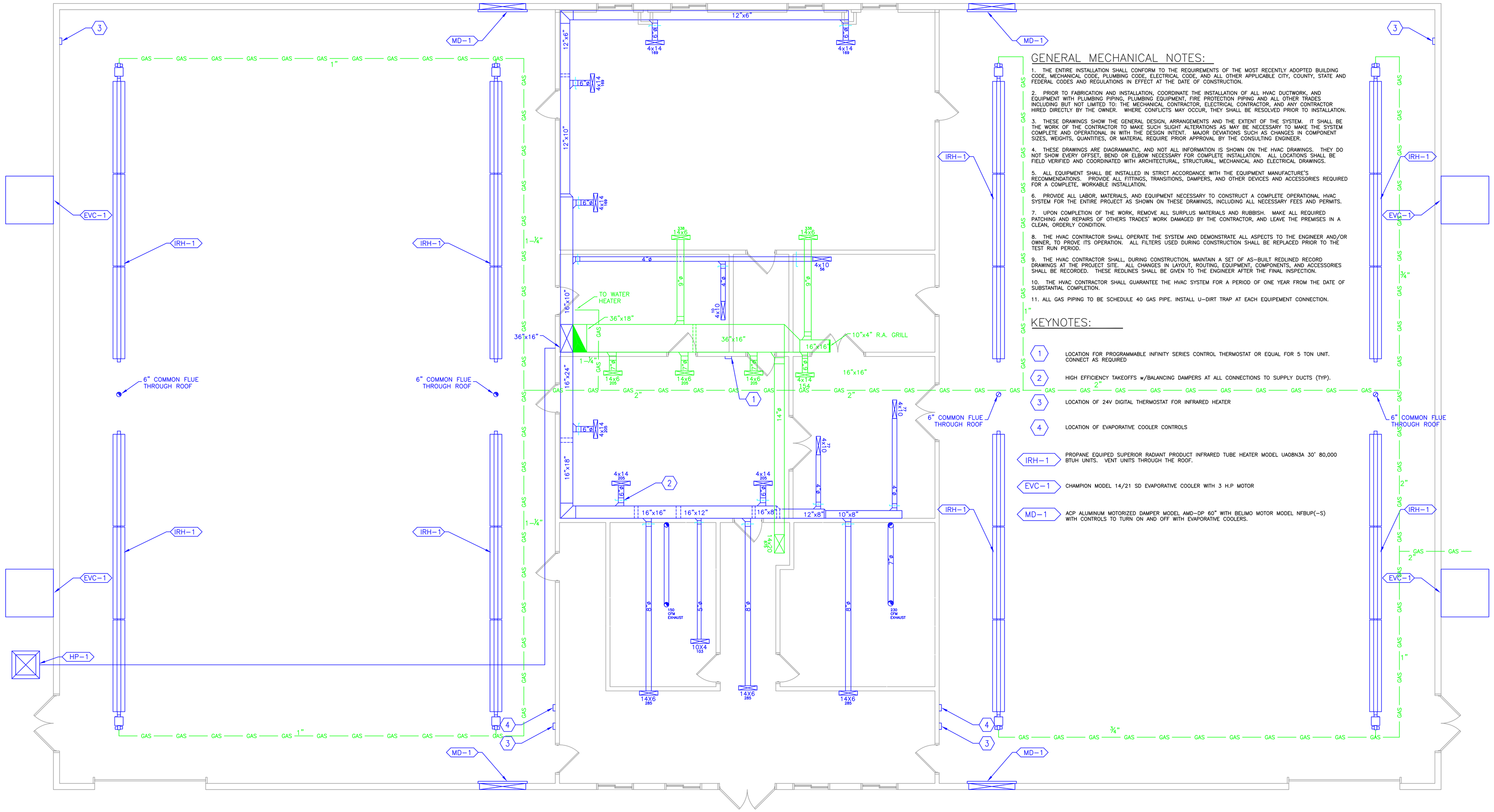

GENERAL MECHANICAL NOTES:

1. THE ENTIRE INSTALLATION SHALL CONFORM TO THE REQUIREMENTS OF THE MOST RECENTLY ADOPTED BUILDING CODE, MECHANICAL CODE, PLUMBING CODE, ELECTRICAL CODE, AND ALL OTHER APPLICABLE CITY, COUNTY, STATE AND FEDERAL CODES AND REGULATIONS IN EFFECT AT THE DATE OF CONSTRUCTION.

2. PRIOR TO FABRICATION AND INSTALLATION, COORDINATE THE INSTALLATION OF ALL HVAC DUCTWORK, AND EQUIPMENT WITH PLUMBING PIPING, PLUMBING EQUIPMENT, FIRE PROTECTION PIPING AND ALL OTHER TRADES INCLUDING BUT NOT LIMITED TO: THE MECHANICAL CONTRACTOR, ELECTRICAL CONTRACTOR, AND ANY CONTRACTOR HIRED DIRECTLY BY THE OWNER. WHERE CONFLICTS MAY OCCUR, THEY SHALL BE RESOLVED PRIOR TO INSTALLATION.

3. THESE DRAWINGS SHOW THE GENERAL DESIGN, ARRANGEMENTS AND THE EXTENT OF THE SYSTEM. IT SHALL BE THE WORK OF THE CONTRACTOR TO MAKE SUCH SLIGHT ALTERATIONS AS MAY BE NECESSARY TO MAKE THE SYSTEM COMPLETE AND OPERATIONAL IN WITH THE DESIGN INTENT. MAJOR DEVIATIONS SUCH AS CHANGES IN COMPONENT SIZES, WEIGHTS, QUANTITIES, OR MATERIAL REQUIRE PRIOR APPROVAL BY THE CONSULTING ENGINEER.

4. THESE DRAWINGS ARE DIAGRAMMATIC, AND NOT ALL INFORMATION IS SHOWN ON THE HVAC DRAWINGS. THEY DO NOT SHOW EVERY OFFSET, BEND OR ELBOW NECESSARY FOR COMPLETE INSTALLATION. ALL LOCATIONS SHALL BE FIELD VERIFIED AND COORDINATED WITH ARCHITECTURAL, STRUCTURAL, MECHANICAL AND ELECTRICAL DRAWINGS.

5. ALL EQUIPMENT SHALL BE INSTALLED IN STRICT ACCORDANCE WITH THE EQUIPMENT MANUFACTURE'S RECOMMENDATIONS. PROVIDE ALL FITTINGS, TRANSITIONS, DAMPERS, AND OTHER DEVICES AND ACCESSORIES REQUIRED FOR A COMPLETE, WORKABLE INSTALLATION.

6. PROVIDE ALL LABOR, MATERIALS, AND EQUIPMENT NECESSARY TO CONSTRUCT A COMPLETE OPERATIONAL HVAC SYSTEM FOR THE ENTIRE PROJECT AS SHOWN ON THESE DRAWINGS, INCLUDING ALL NECESSARY FEES AND PERMITS.

7. UPON COMPLETION OF THE WORK, REMOVE ALL SURPLUS MATERIALS AND RUBBISH. MAKE ALL REQUIRED PATCHING AND REPAIRS OF OTHERS TRADES' WORK DAMAGED BY THE CONTRACTOR, AND LEAVE THE PREMISES IN A CLEAN, ORDERLY CONDITION.

8. THE HVAC CONTRACTOR SHALL OPERATE THE SYSTEM AND DEMONSTRATE ALL ASPECTS TO THE ENGINEER AND/OR OWNER, TO PROVE ITS OPERATION. ALL FILTERS USED DURING CONSTRUCTION SHALL BE REPLACED PRIOR TO THE TEST RUN PERIOD.

9. THE HVAC CONTRACTOR SHALL, DURING CONSTRUCTION, MAINTAIN A SET OF AS-BUILT REDLINED RECORD DRAWINGS AT THE PROJECT SITE. ALL CHANGES IN LAYOUT, ROUTING, EQUIPMENT, COMPONENTS, AND ACCESSORIES SHALL BE RECORDED. THESE REDLINES SHALL BE GIVEN TO THE ENGINEER AFTER THE FINAL INSPECTION.

10. THE HVAC CONTRACTOR SHALL GUARANTEE THE HVAC SYSTEM FOR A PERIOD OF ONE YEAR FROM THE DATE OF SUBSTANTIAL COMPLETION.

11. ALL GAS PIPING TO BE SCHEDULE 40 GAS PIPE. INSTALL U-DIRT TRAP AT EACH EQUIPEMENT CONNECTION.

KEYNOTES:

1	LOCATION FOR PROGRAMMABLE INFINITY SERIES CONTROL THERMOSTAT OR EQUAL FOR 5 TON UNIT. CONNECT AS REQUIRED
2	HIGH EFFICIENCY TAKEOFFS w/BALANCING DAMPERS AT ALL CONNECTIONS TO SUPPLY DUCTS (TYP).
3	LOCATION OF 24V DIGITAL THERMOSTAT FOR INFRARED HEATER
4	LOCATION OF EVAPORATIVE COOLER CONTROLS
IRH-1	PROPANE EQUIPED SUPERIOR RADIANT PRODUCT INFRARED TUBE HEATER MODEL UA08N3A 30' 80,000 BTUH UNITS. VENT UNITS THROUGH THE ROOF.
EVC-1	CHAMPION MODEL 14/21 SD EVAPORATIVE COOLER WITH 3 H.P MOTOR
MD-1	ACP ALUMINUM MOTORIZED DAMPER MODEL AMD-DP 60" WITH BELIMO MOTOR MODEL NFBUP(-S) WITH CONTROLS TO TURN ON AND OFF WITH EVAPORATIVE COOLERS.

DATE:	REVISION:
5/16/11	INITIAL DESIGN
	OWNER REVIEW
	CITY APPROVAL
	FOR CONSTRUCTION

KC FAIRGROUNDS BUILDING
MECHANICAL PLAN
KANE COUNTY, UTAH

SCALE= 3/16"=1'-0"

REDUCE SCALE BY ½ FOR 11x17 DRAWINGS

TC ENGINEERING, PC
A "DESIGN-BUILD" FIRM
EXCELLENCE...ON TIME!
DANIEL W. THEBEAU, P.E.
P.O. BOX 55, KANAB, UTAH 84741
(435)644-2031 (888)644-2031
(435)689-0155

DATE:	FILE:
MAY. 2011	KC
SHEET:	DRAWN BY:
M1.0	RMD

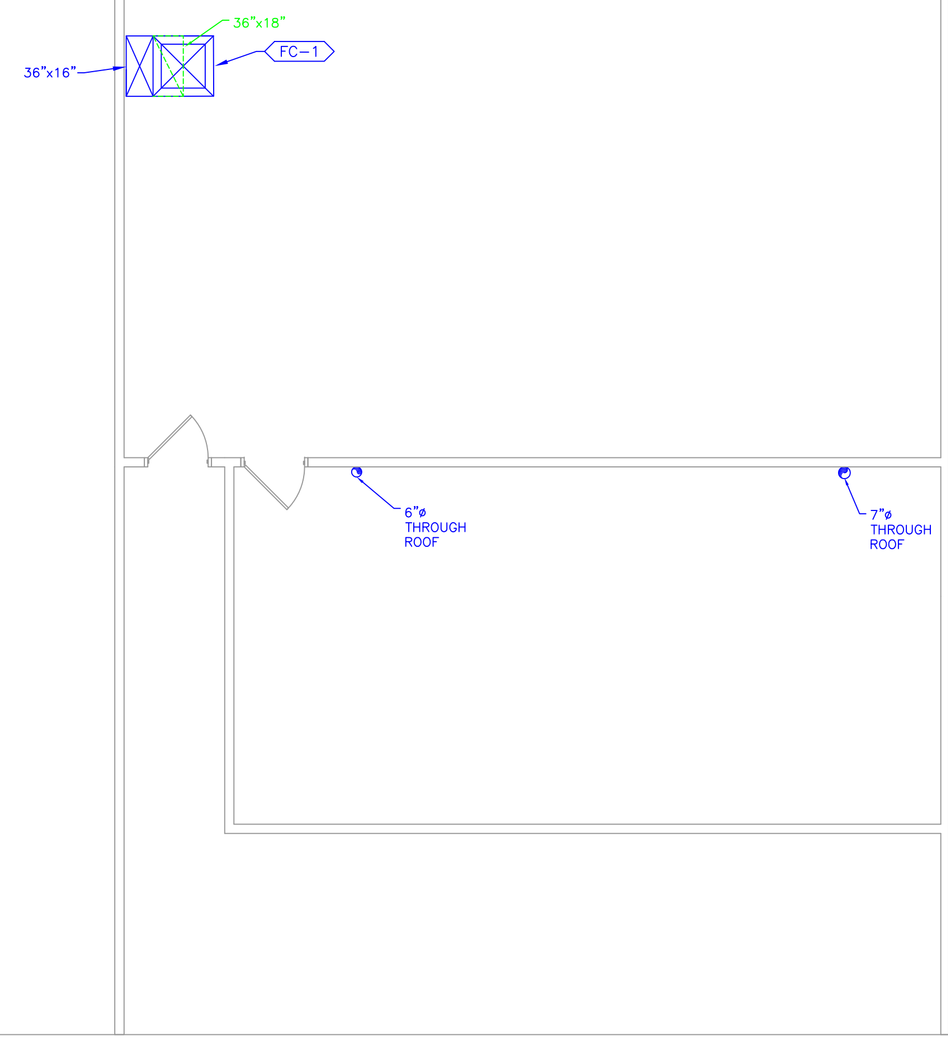

GENERAL MECHANICAL NOTES:

1. THE ENTIRE INSTALLATION SHALL CONFORM TO THE REQUIREMENTS OF THE MOST RECENTLY ADOPTED BUILDING CODE, MECHANICAL CODE, PLUMBING CODE, ELECTRICAL CODE, AND ALL OTHER APPLICABLE CITY, COUNTY, STATE AND FEDERAL CODES AND REGULATIONS IN EFFECT AT THE DATE OF CONSTRUCTION.

2. PRIOR TO FABRICATION AND INSTALLATION, COORDINATE THE INSTALLATION OF ALL HVAC DUCTWORK, AND EQUIPMENT WITH PLUMBING PIPING, PLUMBING EQUIPMENT, FIRE PROTECTION PIPING AND ALL OTHER TRADES INCLUDING BUT NOT LIMITED TO: THE MECHANICAL CONTRACTOR, ELECTRICAL CONTRACTOR, AND ANY CONTRACTOR HIRED DIRECTLY BY THE OWNER. WHERE CONFLICTS MAY OCCUR, THEY SHALL BE RESOLVED PRIOR TO INSTALLATION.

3. THESE DRAWINGS SHOW THE GENERAL DESIGN, ARRANGEMENTS AND THE EXTENT OF THE SYSTEM. IT SHALL BE THE WORK OF THE CONTRACTOR TO MAKE SUCH SLIGHT ALTERATIONS AS MAY BE NECESSARY TO MAKE THE SYSTEM COMPLETE AND OPERATIONAL IN WITH THE DESIGN INTENT. MAJOR DEVIATIONS SUCH AS CHANGES IN COMPONENT SIZES, WEIGHTS, QUANTITIES, OR MATERIAL REQUIRE PRIOR APPROVAL BY THE CONSULTING ENGINEER.

4. THESE DRAWINGS ARE DIAGRAMMATIC, AND NOT ALL INFORMATION IS SHOWN ON THE HVAC DRAWINGS. THEY DO NOT SHOW EVERY OFFSET, BEND OR ELBOW NECESSARY FOR COMPLETE INSTALLATION. ALL LOCATIONS SHALL BE FIELD VERIFIED AND COORDINATED WITH ARCHITECTURAL, STRUCTURAL, MECHANICAL AND ELECTRICAL DRAWINGS.

5. ALL EQUIPMENT SHALL BE INSTALLED IN STRICT ACCORDANCE WITH THE EQUIPMENT MANUFACTURE'S RECOMMENDATIONS. PROVIDE ALL FITTINGS, TRANSITIONS, DAMPERS, AND OTHER DEVICES AND ACCESSORIES REQUIRED FOR A COMPLETE, WORKABLE INSTALLATION.

6. PROVIDE ALL LABOR, MATERIALS, AND EQUIPMENT NECESSARY TO CONSTRUCT A COMPLETE OPERATIONAL HVAC SYSTEM FOR THE ENTIRE PROJECT AS SHOWN ON THESE DRAWINGS, INCLUDING ALL NECESSARY FEES AND PERMITS.

7. UPON COMPLETION OF THE WORK, REMOVE ALL SURPLUS MATERIALS AND RUBBISH. MAKE ALL REQUIRED PATCHING AND REPAIRS OF OTHERS TRADES' WORK DAMAGED BY THE CONTRACTOR, AND LEAVE THE PREMISES IN A CLEAN, ORDERLY CONDITION.

8. THE HVAC CONTRACTOR SHALL OPERATE THE SYSTEM AND DEMONSTRATE ALL ASPECTS TO THE ENGINEER AND/OR OWNER, TO PROVE ITS OPERATION. ALL FILTERS USED DURING CONSTRUCTION SHALL BE REPLACED PRIOR TO THE TEST RUN PERIOD.

9. THE HVAC CONTRACTOR SHALL, DURING CONSTRUCTION, MAINTAIN A SET OF AS-BUILT REDLINED RECORD DRAWINGS AT THE PROJECT SITE. ALL CHANGES IN LAYOUT, ROUTING, EQUIPMENT, COMPONENTS, AND ACCESSORIES SHALL BE RECORDED. THESE REDLINES SHALL BE GIVEN TO THE ENGINEER AFTER THE FINAL INSPECTION.

10. THE HVAC CONTRACTOR SHALL GUARANTEE THE HVAC SYSTEM FOR A PERIOD OF ONE YEAR FROM THE DATE OF SUBSTANTIAL COMPLETION.

KEYNOTES:

FC-1 CARRIER INFINITY SERIES COMMUNICATING VARIABLE SPEED FAN COIL MODEL FE4ANB006 WITH FIELD INSTALLED 10 kW HEAT AUXILIARY HEAT SOURCE.

DATE:	REVISION:
5/16/11	INITIAL DESIGN
	OWNER REVIEW
	CITY APPROVAL
	FOR CONSTRUCTION

KC FAIRGROUNDS BUILDING
MECHANICAL PLAN
KANE COUNTY, UTAH
SCALE= 3/16"=1'-0"
REDUCE SCALE BY ½ FOR 11x17 DRAWINGS

TC ENGINEERING, PC
A "DESIGN-BUILD" FIRM
EXCELLENCE...ON TIME!
DANIEL W. THEBEAU, P.E.
P.O. BOX 55, KANAB, UTAH 84741
(435)644-2031 (888)644-2031
(435)689-0155

DATE:	FILE:
MAY. 2011	KC
SHEET:	DRAWN BY:
M2.0	RMD