May 13, 2016

Attn: Shannon McBride
Kane County Land Use Authority
180 West 300 North
Kanab, Utah 84741

Subject: Conditional Use Permit For Glen Canyon West C Solar Project

Dear Ms. McBride:

Sustainable Power Group (sPower), doing business as Glen Canyon Solar E, LLC, is please to submit the enclosed Conditional Use Permit (CUP) Application for sPower's proposed *Glen Canyon West C Solar Project* (the Project). The Project is a utility scale solar generating facility that would generate up to 140 megawatts (MW) of renewable energy on approximately 900 acres of State of Utah School & Institutional Trust Lands Administration (SITLA) lands. The Project is part of a larger composite of sPower solar power plants proposed in Kane County, Utah. The enclosed CUP Application includes the following Exhibits:

Exhibit A:
- Exhibit A1 – Conditional Use Permit Application
- Exhibit A2 – Project Description

Exhibit B:
- Exhibit B1 – Legal Description
- Exhibit B2 – Parcel Map
- Exhibit B3 – Notarized Affidavit
- Exhibit B4 – SITLA Lease Agreements

Exhibit C:
- Exhibit C1 – Site Plan

Enclosed is a $150 check made payable to Kane County for the *Glen Canyon West C Solar Project* CUP Application fee. Please feel free to contact Nancy Hsu at (714) 296-8890 or Adam Furman at (562) 348-1118 with any questions or concerns.

Sincerely,

[redacted]

Adam Furman

EXHIBIT "A"

Exhibit A1: Application for Conditional Use Permit
Exhibit A2: Project Description

Conditional Use Permit Application

Glen Canyon West C Solar Project

APPLICANT

Glen Canyon Solar E, LLC
2180 South 1300 East, Suite 600
Salt Lake City, UT 84106

May 2016

S·POWER
SUSTAINABLE POWER GROUP

Land Use Authority

180 West 300 North
Kanab, Utah 84741
Phone (435) 644-4966
Or 435-644-4901
Fax (435) 644-4963
planning@kane.utah.gov

Conditional Use Permit Application

Glen Canyon West C Solar Project

Fee $150.00

Property information and location

(All lines applicable to this site must be filled in)

Section 5, 6, 8 **Township** 43 South **Range** 1 East
Parcel # N/A
You MUST include a parcel map obtained from the Kane County Recorder's Office with this application!
Refer to Exhibit B2 of the Conditional Use Permit Application

Property Owner(s) Information

Name(s): State of Utah School & Institutional Trust Lands Administration (SITLA)

Address per tax rolls: 675 East 500 South, Suite 500

City/County: Salt Lake City **State:** Utah **Zip:** 84102

Office/home phone: (801) 538-5100 **Fax phone:** N/A

Mobile phone: N/A **Message phone:** N/A

E-mail address: N/A

A copy of the deed, offer or tax notice MUST be included to demonstrate ownership
Refer to Exhibit B4 of the Conditional Use Permit Application for SITLA Lease Agreements

(for office use only)
CUP# 70 **Fee: $150.00** **Receipt #** ✓3517 - $150.00 5/17/16

Is this an amendment? ☐ **Yes** ☒ **No**

This application MUST be submitted no later than 14 days before the scheduled Land Use Authority Meeting!

ATTACH A LOCATION MAP, SITE AND BUILDING PLAN, AND DETAILED DESCRIPTION OF PROPOSED USE

Revised August 2013

Agent for the property owner(s) information

Name(s): Glen Canyon Solar E, LLC

Address per tax rolls: 2180 South 1300 East, Suite 600

City/County: Salt Lake City **State:** Utah **Zip:** 84106

Office/home phone: (562) 348-1118 **Fax phone:** (562) 348-1113

Mobile phone: _____ **Message phone:** _____

E-mail address: permitting@spower.com

Notarized affidavit by owner that agent has authority to act on their behalf

There shall be no presumption of approval of any aspect of the process. Each application for a Conditional Use Permit shall have all required submittals before it is accepted as a complete application. *It is highly recommended that the applicant or their authorized agent be present at the Planning Commission meeting that the Conditional Use Permit is an agenda item. Electronic appearance is acceptable if prior arrangements are made.

APPLICATION IS HEREBY MADE TO THE LAND USE AUTHORITY REQUESTING THE FOLLOWING CONDITIONAL USE: Solar Power Plant

OTHER COMMENTS: The Project is located on SITLA land and does not have a Kane County Parcel #.

Total acreage of parcel: N/A Area occupied by this use: 900 Acres

Current zoning designation: SITLA Current use of land: Vacant/Undisturbed Land

I (We) understand that the Land Use Authority shall not authorize a Conditional Use Permit unless the evidence presented is such as to establish that such use will not, under the circumstances of the particular case, be detrimental to the health, safety or general welfare of persons residing or working in the vicinity, and the proposed use will comply with the regulations and conditions specified in the Kane County Land Use Ordinance for such use.

Date signed: May 12, 2016

Signature of owner(s) or agent([redacted]

Land Use Authority Action Date: _____

☐ Approve ☐ Deny

Planning Commission Chairman _____

[redacted]

KANE COUNTY
CONDITIONAL USE PERMIT

Glen Canyon Solar E LLC
Name of Applicant

May 16' 2016
Date of Application (attached)

ATTACHMENTS

Exhibit "A"..... Application for conditional use permit

Exhibit "B".....Legal description of property for which conditional use is requested

Exhibit "C".....Site map approved by Commission

FINDINGS OF THE PLANNING AND ZONING COMMISSION

The Planning and Zoning Commission has reviewed the application for a conditional use permit submitted in this matter, has held a regularly scheduled meeting to consider the application and having had an opportunity to fully consider the matter, the Commission hereby makes the following findings:

1. That the proposed use is necessary or desirable and will contribute to the general well-being of the community.

2. That the use will not be detrimental to the health, safety or general welfare of persons residing or working in the vicinity, or injurious to the property or improvements in the vicinity.

3. That the proposed use is in harmony with the intent of the Master Plan and the zone in which it is located.

4. That the sPower Glen Canyon West C Solar Power plant located in sections 5, 6 & 8 Township 43 South, Range 1 East, consisting of 900 acres is in compliance with Kane County Land Use Ordinance, Conditional and Temporary Uses: 9-15A-(1-7) and Solar Power Plants: 9-24-(1-5) and the Escalante Region Multiple Use/Multiple Functions Grazing Zone: 9-27-(1-4).

5. That sPower is in compliance with the Kane County General Plan and Resource Management Plan provisions.

6. That sPower plant will generate emission-free electricity during the highest electricity demand time periods. The Project will offset approximately 283,380 tons of carbon dioxide equivalents annually that will result from producing an equivalent amount of electricity utilizing generators powered by fossil fuels.

7. That sPower can meet the objectives found in section 1.2 of the conditional use permit application: meeting the increasing demand for electricity generated from clean, renewable technology; diversifying of the State's energy portfolio's; reducing greenhouse gas emissions; creating "green" jobs within the State; and stimulating the local economy during construction and operation of the Project, will be in the best interest and overall well being of Kane County and its citizens.

8. **1.2 Project Objectives:** The Project's objective is to minimize impacts to the environment and local community by: Using existing electrical distribution facilities, rights-of-way, roads, and other existing infrastructure where possible to minimize the need for new electrical support facilities; minimizing impacts to threatened or endangered species or their habitat, wetlands and water of the United States, cultural resources, and sensitive land use; minimizing visual and aesthetic impacts through construction of a low profile solar PV facility, develop the Project in accordance with SITLA Special Use Lease Agreement No. 1793 executed on December 22, 2014 and Amendment No. 1 to Special Use Lease Agreement No. 1793 executed on November 1, 2015; and constructing, operating and maintaining the Project in compliance with local, state and federal regulations including, but not limited to, Kane County Chapter 24 regulations and Utah Code § 17C-4-103.

9. **2.0 Project Description:** The Project is part of a larger composite of sPower proposed solar power plants in Kane County, Utah that would be constructed in phases and operated for a minimum period of 30 years. The solar field would be laid out in a common PV block design to allow adequate clearance or access roads and adequate access for maintenance.

10. **2.1 Project Location:** The Project will be located on approximately 900 acres of vacant, undisturbed land that is zoned "SITLA" in the southern portion of Kane County, Utah. Refer to Exhibit B1 for a legal description of the Project Site and Exhibit B2 for a parcel map of the Project Site. The lands surrounding the Project Site are vacant, undisturbed lands, with U.S. Highway 89 running in an east-west direction north of the Project Site, and a small sparsely populated residential community located approximately 0.25 miles north of the Project Site Zoned "R-1", Residential. sPower acknowledges that ranching, animal operations, and other agricultural activities are the primary land use of the GSENM Multiple Use/Multiple Functions Grazing Zone which mainly consist of agricultural uses surrounding the Project Site. sPower is actively engaged with SITLA and local ranchers to work cooperatively and mitigate potential impacts to grazing and ranching activities.

11. **2.2.3 DC and AC Collection, Inverters, and Transformers:** Underground electrical cables will be installed using ordinary trenching techniques. Trenching is expected to be relatively shallow. All construction activity (trenching, electrical routing, backfilling, and compaction) will be conducted in accordance with local, State, and federal codes.

12. **2.2.5 Solar Power Plant Switchgear:** Recommendations will mitigate safety issues by requiring switchgear areas to be excavated for the transformer equipment, control building foundation, and oil containment area. Reinforced concrete will be used for foundations. Structural components in the switchgear areas will include: transformers, switchgear, and safety systems, footings and oil containment system for transformers.

13. **2.4 Kane County Municipal Code Chapter 24 Compliance:** Chapter 24, Solar Power Plants, of the Kane County Land Use Ordinance establishes minimum requirements and regulations for the placement, construction and modification of solar power plants. The proposed Project shall comply with all applicable measures codified in Chapter 24 of the Kane County Municipal Code.

14. **2.5.2 PV System Installation:** Mitigation procedures for PV installation will be installed in compliance with this section.

15. **2.5 SITLA Lease Agreement Compliance:** sPower has entered into lease agreements with SITLA (Special Use Lease Agreement No. 1793 and Amendment No. 1 to Special Use Lease Agreement No. 1793) on December 22, 2014 and November 1, 2015 for the purpose of constructing, operating, and maintaining a commercial solar electric generating facility, together with transmission lines and ancillary facilities at the Project Site (refer to Exhibit B4). As stated in the lease agreements, sPower will adhere to all mutual promises and covenants contained in the lease agreements.

    Article 5, Regulatory Compliance, of Special Use Lease Agreement No. 1793 specifies environmental regulatory components including, but not limited to, hazardous materials, endangered species, antiquities, wildfires, and waste. sPower is committed to complying with all regulatory components contained in the lease agreements, including preparation of a Biological Resources Technical Report and a Cultural Resources Technical Report. Both reports will be submitted to Kane County and SITLA prior to construction of the Project. In the event endangered species or resources of historical or cultural significance are identified at the Project Site, sPower will comply with all federal and State regulations to protect said resources.

16. **2.6.3 Construction Workers, Hours, and Equipment:** The Project will generate an estimated 200 new jobs during the construction phase and will provide approximately two (2) full time positions over the life of the facility for O&M activities.

17. **2.6.4 Emergency and Shutdown Procedures:** To ensure the safety of all employees working on the Project during construction, sPower will develop and implement an Emergency Response Plan for the Project in accordance with Code of Federal Regulation 1910.38 established by the Occupational Safety and Health Administration (OSHA). Key personnel will be designated to train all employees working on the Project, and will be responsible for administering emergency and shutdown procedures in the event of an emergency. Emergency and shutdown procedures will be clearly displayed in all construction trailers, along with contact information for emergency service providers and treatment facilities. Appropriate warning signage will be placed on all towers, electrical equipment, and Project Site ingress and egress points. Prior to construction, sPower will notify all emergency service providers of construction activities occurring at the Project Site and inform them of all emergency and shutdown procedures, including who needs to be contacted in case of an emergency.

sPower will coordinate its development of the Emergency Response Plan with the Kane County Fire Warden to ensure satisfactory safety measures are in place in the event of a wildfire. Safety measures shall include fire suppression methods that can be immediately deployed during both construction and operation of the Project. A water tank will be constructed on the Project Site to supply water to emergency service providers and regularly maintained with the guidance of the Kane County Fire Warden.

The Project will comply with the defensible space requirements of the Utah Wildland-Urban Interface Code throughout construction of the Project; ongoing maintenance will be provided to ensure removal of excessive grass, weeds, and other flammable materials from the defensible space area. sPower will facilitate training for emergency service providers related to the specific hazards of the Project.

CONDITIONAL USE PERMIT GRANTED

Based on the application submitted and based on the forgoing findings of fact, the Commission hereby grants the conditional use as outlined below, subject to all conditions listed herein and any other conditions enforceable in law or in equity. In the event that any of the conditions of this permit are not followed, the Commission reserves the right to revoke, in whole or in part, the conditional use granted herein.

Applicant is hereby granted the following conditional use:

Glen Canyon West C. Solar power plant on 90.6 acres on SITLA land

CONDITIONS OF PERMIT

1. The holder of this permit must obey all state, local and federal laws in regard to use of the land on which this conditional use permit is granted. This includes compliance with all local ordinances, zoning ordinances, rules, regulations or other local laws.

2. Holder agrees to appear, when summoned in writing, at any meeting held by the Kane County Planning and Zoning Commission or the Kane County Commission, to address or answer any questions regarding the conditional use granted herein, including but not limited to holder's compliance or non-compliance with the conditions of the permit. Holder further agrees to make written response regarding compliance or non-compliance when requested by the Kane County Planning and Zoning Commission or the Kane County Commission.

3. Holder is allowed to construct and maintain the facilities, structures, and/or landscaping outlined in the site map which is attached hereto as Exhibit "C" and is hereby approved as part of this conditional use permit. Holder is not allowed to construct any additional facilities, structures, and/or landscaping unless said additions are approved by the Planning and Zoning Commission as part of this conditional use or approved as activities that are acceptable within the zone.

4. Holder shall maintain all property and facilities used under this conditional use permit in good condition and repair and shall not allow their activities to cause or create a circumstance which causes or creates disturbance to persons or properties in the area surrounding the property which is the subject of this conditional use permit.

5. The conditional use permit will expire after one **(1) year** unless substantial work shall have been accomplished towards completion of the use. Whether or not substantial work has been accomplished shall be determined by the Planning and Zoning Commission.

6. This conditional use permit is granted with the use of the land, unless otherwise revoked or

modified by the Planning and Zoning Commission as outlined herein, or as otherwise allowed by law and equity. If holder fails to complete the project within a reasonable time after one **(1) year** from the date of this permit, the Planning and Zoning Commission reserves the right to revoke the conditional use permit granted herein and the term above specified will no longer apply. Before the expiration of any term specified herein, holder may apply to extend the conditional use permit granted herein.

7. The holder of this permit shall allow members of the Planning and Zoning Commission, members of the Kane County Commission, the Kane County Building Inspector, and their designated agents to inspect the premises during the course of construction, and thereafter, to insure that holder is complying with the conditions of the conditional use permit.

8. This conditional use permit may not be transferred or assigned without express written consent of the Planning and Zoning Commission.

9. Kane County has not adopted a resolution for a Community plan found in Utah Code 17C-4-103.

10. **2.2.1 Photovoltaic Modules:** The actual total number of PV modules will depend on the technology selected, optimization evaluation, and detailed design. The market conditions, economic considerations, and environmental factors will be taken into account during the detailed design process. The following PV module technologies or equivalent are planned to be incorporated into the solar power plant:

- PV thin-film technology
- PV crystalline silicon technology
- Stationary fixed-tilt modular configuration
- Tracking module configuration

The modules will be oriented toward the south and angled at a degree that will optimize solar resource efficiency. For the tracking configuration, the modules will rotate from east to west over the course of the day. Modules will be non-reflective and highly absorptive. During construction, the PV modules will be delivered to the Project location to support the installation schedule. The final design and total number of PV modules will need to be permitted through the building permit process and the Land Use Administrator and Kane County Engineer involved in the final review.

11. **2.2.2 Standard Installation, Array Assembly, and Racking:** There are a variety of module mounting systems from various manufacturers that are available in the solar industry. Fixed-tilt, single- axis trackers, and dual-axis trackers provide various levels of energy efficiencies. These systems are under consideration for the Project. The final system design will be determined by using optimization evaluations and economic assessments. The foundations are typically cylindrical steel pipes/piles driven into the soil using pneumatic techniques, similar to hydraulic pile driving. The final foundation design will be determined based on the geotechnical survey for the Project location. Once the foundation has been installed, the module racking system will be installed to support the PV modules. For a tracking configuration, motors will be installed to drive the tracking mechanism.

The module mounting system will be oriented in rows within a PV design block reflecting a standard and uniform appearance across the facility. The module configuration will be uniform in height and

width, although the actual height of the arrays will vary due to ground elevations. Grading activities will be limited to access roads where appropriate to minimize dust generation throughout the construction and operation of the facility. All grading activities for the project will minimize dust by limiting access roads where appropriate throughout the construction and operation of the facility. Air Quality regulations will also need to be adhered to, especially with the construction site so close to Highway 89. Water contracts for water hauling need to be established at the time of the building permit application. At the time of the building permit final design standards for the modules and systems will need to be approved through the building department and Land Use Administrator.

12. **2.2.3 DC and AC Collection, Inverters, and Transformers:** Underground electrical cables will be installed using ordinary trenching techniques. Trenching is expected to be relatively shallow. All construction activity (trenching, electrical routing, backfilling, and compaction) will be conducted in accordance with local, State, and federal codes.

13. **2.2.4 Energy Storage:** Energy storage will include an intelligent battery system onsite. The battery storage technology is a modular and fully enclosed power storage system that uses telecommunication systems and real-time control software to charge and discharge the battery according to power delivery needs. Typical modular energy storage solutions are approximately 102 inches in height and 20 to 40 feet in length. The energy storage solution will be located near inverter stations or near switchgear, and will depend on the technology chosen and needs of the overall system. Battery disposal will be conducted in accordance with all State and Federal Regulations. At the end of the battery life the batteries will be disposed of outside of Kane County.

14. **2.2.5 Solar Power Plant Switchgear:** Recommendations will mitigate safety issues by requiring switchgear areas to be excavated for the transformer equipment, control building foundation, and oil containment area. Reinforced concrete will be used for foundations. Structural components in the switchgear areas would include: transformers, switchgear, and safety systems, footings and oil containment system for transformers.

15. **2.3 Points of Interconnection:** Interconnection agreements need to be obtained before the building permit can be granted. The Applicant shall obtain the necessary road encroachment permits for the utility crossings and other improvements to be located within the County road rights-of-way. All electrical interconnection or distribution lines shall comply with all applicable codes and standard commercial large scale utility requirements. "PV" systems must be approved for interconnection by the serving utility before operations can begin, if so connect. (Ord. 2013-5, 8-12-2013, eff. 8-27-2013

16. **2.4 Kane County Municipal Code Chapter 24 Compliance:** Chapter 24, Solar Power Plants, of the Kane County Land Use Ordinance establishes minimum requirements and regulations for the placement, construction and modification of solar power plants. The proposed Project will comply with all applicable measures codified in Chapter 24 of the Kane County Municipal Code.

17. **2.5 SITLA Lease Agreement Compliance:** sPower has entered into lease agreements with SITLA (Special Use Lease Agreement No. 1793 and Amendment No. 1 to Special Use Lease Agreement No. 1793) on December 22, 2014 and November 1, 2015 for the purpose of constructing, operating, and maintaining a commercial solar electric generating facility, together with transmission

lines and ancillary facilities at the Project Site (refer to Exhibit B4). As stated in the lease agreements, sPower will adhere to all mutual promises and covenants contained in the lease agreements.

Article 5, Regulatory Compliance, of Special Use Lease Agreement No. 1793 specifies environmental regulatory components including, but not limited to, hazardous materials, endangered species, antiquities, wildfires, and waste. sPower is committed to complying with all regulatory components contained in the lease agreements, including preparation of a Biological Resources Technical Report and a Cultural Resources Technical Report. Both reports will be submitted to Kane County and SITLA prior to construction of the Project. In the event endangered species or resources of historical or cultural significance are identified at the Project Site, sPower will comply with all federal and State regulations to protect said resources.

18. **2.6 Project Construction: 2.6.1 Site Preparation:** The following Best Management Practices (BMPs) will be applied as stated in the Site Preparation paragraph: worker's facilities, roads and erosion control will be employed during site preparation and water truck refilling stations (if required) for Air Quality compliance through the Department of Air Quality for dust control. All the sites are very close to Highway 89, which has a lot of tourist traffic, and safety needs to be of utmost importance. This final BMP is required for Grading Activities. The disturbed, unpaved portions of the developed project site must have some type of ground cover to prevent the blowing of excess dust and dirt. Fugitive dust impacts from the project site shall be closely monitored during construction, and dust control methods shall be utilized as necessary to minimize fugitive dust from the project site.

19. **2.6.2 PV System Installation:** Mitigation procedures for PV installation will be installed in compliance with this section. Waste generated during construction will be handled by sPower's Engineering, Procurement, and Construction (EPC) contractor. The EPC contractor will contract with a waste and recycling service provider to ensure all waste generated from construction of the Project is disposed of in accordance with federal and State regulations. Methods of waste disposal and recycling will be coordinated with the Kane County Land Use Authority. The EPC contractor will store, collect, and dispose of solid waste in such a manner as to prevent fire and health hazards, rodent harborage, insect breeding, accidents, and odor in accordance with Kane County solid waste rules and protocol. The EPC contractor will ensure that no littering of the Project Site or neighboring properties will occur during construction.

20. **2.6.3 Construction Workers, Hours, and Equipment:** Hours of construction will follow Kane County regulations. If weekend or night hours are required on an "as-needed basis", a sPower representative will contact Kane County Land Use Administrator to have the CUP conditions amended. Kane County Administrator is the contact for public complaints for hours of operations; any change in the normal business hours will require contacting the Land Use Administrator. (Kane County Land Use Ordinance 9-15A-2-E-5)

21. **2.6.4 & 2.7.4 Emergency and Shutdown Procedures:** Key personnel designated to train all employees working on the Project will need to contact local emergency agency staff and inform them of the emergency shutdown procedures including who needs to be contacted in the case of an emergency. To ensure the safety of all employees working on the Project during construction,

sPower will adhere to the Emergency and Shutdown Procedures as stated in 2.6.4 and 2.7.4.

22. **Wildland Fire Protection:** The project shall comply with the defensible space requirements of the Utah Wildland-Urban Interface Code throughout construction and operation of the facility. Ongoing maintenance must be provided to ensure removal of grass, weeds, and other flammable materials from the defensible space area. Any vegetation control at the site shall use materials and methods that ensure protection of the groundwater. Know-Box rapid entry systems or other approved substitutes shall be required for each entrance gate and coordinated with the Kane County Fire Warden. The Applicant shall offer to facilitate training for the appropriate fire departments(s) with training relating to the specific hazards of the Solar Power Plant (e.g. transformer fires, shock hazards).

23. **2.6.5 & 2.7.5 Transportation:** All descriptions for transportation in section 2.6.5 will be complied with. The Kane County Land Use Authority requires all county, state and federal permits be obtained and complied with. No building permit will be issued until all required permits are obtained. Utah Department of Transportation encroachment and access permits will be required to move forward on this project with any grading or building permit, due to the limited access off Highway 89.

The above requirements are found in Kane County Land Use Ordinance 9-15A-2-20.

20. Requiring turn lane improvements at street intersections when:
    a. An unsafe condition would be created by the development without the improvements; or
    b. The projected increase in traffic generated by the new or expanded use will lower the level of service;
21. Providing for emergency access.

The Project will generate an estimated 200 new jobs during the construction phase for each project. Employees will arrive by private automobile with an estimated 25-percent of them carpooling. Therefore, the maximum amount of employee trips per day to the Project Site will be approximately 150. Additionally, a project of this size will require approximately 66 truck trips per day for the duration of project construction. Therefore, the project has the potential to generate up to 216 trips per day to the Project Site during construction (heavy haul 39; medium haul 27). sPower anticipates relatively equal amounts of personnel coming from the City of Kanab, Utah and the City of Page, Arizona populations east and west of the Project Site.

Access to the Project Site will be provided via U.S. Highway 89, most likely at the northeastern section of the Project Site; approximately 915 feet west of Milepost 16 (refer to Exhibit C1, *Site Plan*). To ensure the project does not impact the local circulation network or cause significant traffic on U.S. Highway 89, sPower will develop and implement a Transportation Management Plan in coordination with the Kane County Engineer and UDOT prior to construction and issuance of a building permit. The Transportation Management Plan will identify potential hazards associated with the Project, outline safety and traffic calming measures, and provide guidelines for accessing the Project Site during construction and emergency situations. The Transportation Management Plan will designate specific routes for employees, delivery trucks, and emergency vehicles, and will specify design features and upgrades needed for safe and adequate ingress/egress and internal

service roads. Internal service roads will be unpaved and maintained throughout construction of the Project.

Deliveries to the Project Site will be facilitated during off-peak traffic hours and comply with regulations governing oversized loads. sPower will document existing roadway conditions and restore any roadways damaged during construction to their pre-existing condition. Additionally, sPower will obtain all necessary permits from UDOT prior to construction and issuance of a building permit of the Project.

Equipment, permanent materials, and commodities for the Project will be transported to the Project Site via rail and state and/or interstate highways. Heavy hauls will be shipped via rail to nearest active railroad spur for offloading and transported by truck to the Project Site. Heavy haul trucks with multiple axles will be employed to distribute loads, as required. All equipment and material deliveries will utilize the Project Site access.

Truck deliveries of equipment and materials will occur beginning with the initial construction notice to proceed and continuing through the duration of the Project construction process. Initial truck deliveries will include heavy haul trucks for importing panels, project materials, followed by concrete trucks for installation of the solar field and major foundations, and deliveries of reinforcing steel. Electrical cabling and piping materials for buried piping will be delivered to the Project Site early in the construction period corresponding to approximately the time frame for foundation installation. Deliveries of large major equipment will commence at about midpoint of the construction period.

The Project will primarily be operated remotely and monitored by on-site staff for security and maintenance purposes. Therefore, transportation to and from the Project Site will be minimal and would not adversely affect traffic conditions along U.S. Highway 89. As stated above, signs will be clearly marked at the Project Site in the event that emergency vehicles need to access the Project Site. The paved driveway providing access to the Project Site via U.S. Highway 89 and unpaved internal road system will be maintained as needed during the life of the Project.

24. **2.6.6 Parking and Staging Areas:** sPower will ensure adequate parking is provided for construction workers at the Project Site and prohibit parking along U.S. Highway 89. In addition to parking, the Project will require a temporary staging area for storing materials, assembling components, refueling equipment, and installing construction trailers. The parking and staging area will be located on the southeastern portion of the Project Site, to minimize transportation on unpaved roads. Parking and staging signs will be clearly placed at ingress and egress points to direct traffic to the proper location. Refer to Exhibit C1, *Site Plan*, for a depiction of the temporary parking and staging areas.

25. **2.6.7 Hazardous Materials:** Construction of the Project will involve small quantities of commonly used hazardous materials, such as fuels and oils, to operate construction equipment. The use, storage, and disposal of hazardous materials and wastes will be governed according to regulations established by OSHA and the Utah Department of Environmental Control, Division of Waste Management and Radiation Control. This regulatory structure ensures that safety measures and precautions are implemented, thereby reducing potential impacts associated with an accidental

spill or release of hazardous materials. sPower will prepare and implement an Emergency Response Plan for the Project that outlines safety procedures in the event of an accidental spill or release of hazardous materials. Key personnel will be designated to train all employees working on the Project, and will be responsible for administering safety procedures in the event of an accidental spill or release of hazardous materials. Safety procedures will be clearly displayed in all construction trailers, along with contact information for emergency services and treatment facilities.

Prior to construction and issuance of a building permit, sPower will conduct a Phase I Environmental Site Assessment (ESA) to determine the potential for existing hazardous materials at the Project Site. In the event existing hazardous materials are discovered at the Project Site, sPower will work with SITLA to ensure full cleanup and proper disposal of hazardous materials in accordance with federal and State regulations.

26. **2.6.8 Waste and Recycling:** Construction waste will be generated from installation of the solar arrays and related facilities. Construction waste is expected to consist of mostly recyclable materials such as cardboard, steel, and electrical wiring. sPower's Engineering, Procurement, and Construction (EPC) contractor will be responsible for construction of the Project will disassemble and recycle shipping containers and solar panel packaging to minimize solid waste impacts. The EPC contractor will contract with a waste and recycling service provider to ensure all waste generated from construction of the Project is disposed of in accordance with federal and State regulations. Methods of waste disposal and recycling will be coordinated with the Kane County Land Use Authority. The EPC contractor will store, collect, and dispose of solid waste in such a manner as to prevent fire and health hazards, rodent harborage, insect breeding, accidents, and odor in accordance with Kane County solid waste rules and protocol. The EPC contractor will ensure that no littering of the Project Site or neighboring properties will occur during construction, or the life of the project.

Waste and recycled materials will be separated and stored in large containers at the Project Site, and then hauled to an off-site facility for proper disposal. Options for waste and recycling services may include a nearby municipality such as Page, Arizona who delivers their solid waste to Purgatory Valley in Washington County, or contract with a private waste hauler such as Republic Services located in Page, Arizona, approximately 25 miles from the Project Site. It is expected that sPower or its contractor will enter into waste services agreements to coordinate with the local service company to handle waste during construction.

27. **2.6.9 Sanitation Services:** No wastewater facilities exist at the Project Site and no such facilities will be constructed for the Project. Portable restroom facilities will be provided and maintained by sPower's EPC contractor during construction. sPower will be responsible for maintaining its own sanitation services/facilities for the life of the project.

28. **2.6.10 & 2.7.6 Water Supply:** It is anticipated that a 140 MW project on 900 acres will use approximately 200-250 acre-feet of water during construction. Prior to initiation of construction, sPower will secure water rights from local sources. It is anticipated that water will be supplied from a newly constructed on-site well or trucked in from a local provider. Water will primarily be used for dust control on un-paved roads, and will be applied via water trucks. Additionally, as stated above, a water tank will be constructed on the Project Site to supply water to emergency service providers and regularly maintained with the guidance of the Kane County Fire Warden.

29. **2.6.11 Fugitive Dust Control Plan:** The Utah Department of Environmental Quality regulates fugitive dust emissions via Rule R307-309, requiring development of a Fugitive Dust Control Plan (R307-309-6). sPower will develop and submit a Fugitive Dust Control Plan to the Utah Division of Air Quality prior to the start of construction. sPower will closely monitor fugitive dust at the Project Site, ensure that all construction activities comply with R307-309, and adhere to the measures outlined in the approved Fugitive Dust Control Plan.

30. **2.6.12 Construction Noise:** Health and Public Safety Ordinance 4-3-3-B-25 prohibits noise that is inconsistent with a zoning area between the hours of 11:00 p.m. and sunrise. As the Project Site is zoned "SITLA", the County does not have adopted standards for noise on SITLA lands. Surrounding lands are primarily zoned SITLA with the exception of a small, sparsely populated residential community located approximately 0.25 miles to the north immediately north of the Project Site zoned "R-1", Residential.

Noise emanating from construction activities will be consistent with Kane County's Health and Public Safety Ordinance by occurring during daylight hours. Specifications regarding hours of construction will be followed per Kane County regulations. If weekend or night hours are need on an "as-needed basis" sPower will coordinate with the Kane County Land Use Administrator to have the CUP conditions amended per Land Use Ordinance 9-15A-2-E-5.

The loudest construction activity at the Project Site will occur while driving piles for the solar arrays and tracking system. According to the U.S. Department of Transportation, Federal Highway Administration, pile drivers have the potential to generate noise levels up to 101 A-weighted decibels (dBA) when measured at a distance of 50 feet. As noise generated from a stationary source attenuates at a rate of six (6) dBA per doubling of distance, it can be reasonably assumed that the nearest habitable structures (residences located approximately 0.25 miles to the north of the Project Site) will experience maximum noise levels of approximately 73 dBA during construction. Pile driving will occur over a short period of time during construction (less than one week), and notices will be sent to neighboring residences prior to pile driving. Only a small section of the Project Site that requires pile driving will potentially impact neighboring residences. sPower will coordinate with Kane County Land Use Authority to ensure noise impacts to neighbors during pile driving are minimal and can be mitigated. Therefore, construction noise emanating from the Project Site is not an impact on neighboring residences for the duration of construction activities.

As stated above, construction traffic will access the Project Site via U.S. Highway 89. U.S. 89 experiences high levels of tourist traffic throughout the year, due to its close proximity to Lake Powell and the Grand Canyon. Therefore, it is anticipated that construction traffic will not significantly increase the existing mobile noise along U.S. Highway 89, and will not impact local residences in the vicinity of the Project Site.

31. **2.6.13 Landscaping:** The Project will include installation of low-profile solar panels, with heights approximately four (4) feet from the center axis. Exhibit C1, *Site Plan*, incorporates a 50-foot setback from U.S. Highway 89, providing a buffer of existing vegetation that will screen views of the Project from U.S. Highway 89.

The 50-foot setback utilizes existing vegetation and topography to shield views from traffic along U.S. Highway 89. No habitable structures are located within the immediate vicinity of the Project Site. Views will not impact local residences due to this Project.

32. **2.7 Project Operation and Maintenance:** Mitigation standards as outlined will be required.

33. **2.7.8 Operational Noise:** Land Use Ordinance 9-24-3-E states that no solar power plant shall exceed 65 dBA as measured at the property line or 50 dBA as measured at the nearest neighboring habitable structure. Primary sources of operational noise will include the inverters and solar tracker system, and will be limited to daytime hours when the Project is generating electricity.

The Project will utilize technology that will keep the operational noise in compliance with Land Use Ordinance 9-24-3-E. The Project will utilize the new Power Electronics HEC-US PLUS outdoor inverters and the Array Technologies HZ v2 Tracker. The HEC-US PLUS outdoor inverter has a measured noise level of less than 70 dBA when measured at a distance of 1 meter (3.28 feet), and the HZ v2 Tracker has a measured noise level of 62 dBA when measured at a distance of 100 feet. In order to remain compliant with Land Use Ordinance 9-24-3-E, the HEC-US PLUS outdoor inverters must be located at least 6 feet from the Project's property line and 33 feet from the nearest habitable structure; and the HZ v2 Tracker must be located at least 71 feet from the Project's property line and 400 feet from the nearest habitable structure. Should a different inverter or tracker be selected, calculations will be made to ensure that the noise generating device will be located a sufficient distance away so that noise does not impact neighboring residences. The nearest habitable structures are located approximately 0.25 miles to the north of the Project Site. Any noise associated with operation of the Project will be in compliance with Land Use Ordinance 9-24-3-E.

34. **2.7.9 Light and Glare:** To mitigate light and glare, the Project will include inward facing, low-level security lighting at ingress and egress points at the Project Site. Project lighting will be directed downward onto the Project Site and will be shielded to illuminate intended areas only. The project substation will be lit to a minimum 22 lux (equivalent to 2 foot candles) when staff are at the Project Site working, but will not be lit when the station is unstaffed. The maximum lighting for the project substation will be 1,000 lux for service and repair work (emergency Repair service). Normal night lighting will be approximately 22 to 30 lux for station lights. (A 40 watt bulb would equate to approximately 280 lux.) All lighting for the project will be pointed downward with shields PV panels used for the Project will be dark blue or black with minimal light reflection and contain a microscopically irregular surface designed to trap incident rays of sunlight. The PV panels will utilize high-transmission, low-iron glass, which absorbs more light, producing smaller amounts of glare and reflectance than normal glass. "Light trapping" will also be integrated into the PV panels. sPower will work to mitigate glint and glare through selection of technology and the Project footprint to the maximum extent practical.

These lighting measures will reduce the amount of light trespass falling outside the Project Site boundaries. All lighting measures will comply with Kane County Land Use Ordinance **9-10-14: LIGHTING:** The concerns of safety, utility, dark sky protection and aesthetic appearance need not compete. Good modern lighting practices can provide adequate light for safety and utility without excessive glare or light pollution. Careful attention to when, where, and how much nighttime lighting is needed results in better lighting practices, darker skies and reduced energy use and costs.

Kane County encourages lighting practices and systems which will: minimize light pollution, glare, and excessive glare; conserve energy and resources while maintaining nighttime safety, utility, security, and productivity; and curtail the degradation of the nighttime visual environment. Any and all new and major addition to land uses, developments and buildings or structures are encouraged to use hooded lighting practices. (Ord. 2013-5, 8-12-2013, eff. 8-27-2013)

As of June 2013, there were over 30 solar projects in operation at airports in 15 different states. Solar installations have been successfully located at or near US international airports in Boston, New York, San Francisco, and Denver, among others. As the nearest airport to the Project Site is the Page Municipal Airport located approximately 20 miles to the southeast, it is not anticipated that light and glare emanating from the Project Site would impact aircraft flying over the Project Site.

35. **2.7.10 Security:** The Project will be monitored by security staff during operations. An appropriate security fence with warning signs will be placed around the perimeter of the Project and all electrical equipment will be locked. sPower will coordinate with the Kane County Fire Warden to install an approved, electronically controlled security access gate at the Project Site. The Project will include inward facing, low level security lighting and cameras at ingress and egress points.

36. **2.7.11 Electric and Magnet Fields:** Voltage and amperage is similar to that in other neighborhoods that contain low and medium voltage distribution lines. Out of the sites, the highest potential for EMF is from transmission lines. Transmission lines that will be installed will be similar to already existing transmission lines in the area. Induced currents and voltages on conducting objects near the proposed gen-tie lines represent a small potential hazard; but these gen-tie lines do not pose a threat if the conducting objects are properly grounded. As part of the siting and construction process for the Project, sPower will site all proposed gen-tie lines with nothing underneath them that will conflict with grounding. Potential health effects from exposure to electric fields from the Project will be negligible.

37. **2.7.12 Telecommunications Interference:** sPower will respond to and document all radio/television/equipment interference complaints received and the responsive action taken. These records will be made available to the County upon request.

38. **2.8 Project Decommissioning:** sPower will decommission and remove the system and its components at the end of the life of the Project. The Project site can be converted to other uses in accordance with applicable land use regulations in effect at that time. All decommissioning and restoration activities will adhere to the requirements of the appropriate governing authorities and will be in accordance with the SITLA Lease Agreements and all applicable federal, state and Kane County regulations.

***Below are excerpts from the SITLA Lease agreement: The mitigation procedures and conditions will be adhered to with the SITLA/Sustainable Power Group lease.**

The lease agreement contains all bonding and maintenance approaches that are in compliance with Kane County procedures for reclamation, maintenance and good condition(s) facilities practices.

sPower will decommission and remove the system and its components at the end of the life of the Project. The Project site could then be converted to other uses in accordance with applicable land use regulation in effect at the time. All decommissioning and restoration activities will adhere to the requirements of the appropriate governing authorities and will be in accordance with all applicable federal, state and Kane County regulation. As per decommissioning requirements and construction bonding requirements the SITLA lease agreement in 4.1 (c) construction bonding-at Lessee's expense, such a payment, performance, completion bonds or other form of surety upon Lessor's reasonable request from time to time. At Lessor's election bonds or other security posted with third party may be deemed sufficient. **The mitigation procedures will be adhered to through the SITLA/Sustainable Power Group lease agreement and SITLA will regulate and monitor these measures.**

39. **Article 5.1: Regulatory Compliance-Section 5.1:** The lease terms will need to be complied with for observance of governmental regulations. In Lessee's use and occupancy of the Premises and the performance by Lessee of its rights and obligations under this Lease, Lessee shall fully comply with all laws, orders, rules, regulations, directives, ordinances and requirements of all governmental authorities having jurisdiction over Premises, or any part thereof, and Lessee shall pay all costs, expenses, liabilities, losses, fines, penalties, claims and demands including, without limitation, reasonable attorney's fees, that may in any way arise out of or be imposed because of the failure of Lessee to comply with such laws, orders, rules, regulations, directives, ordinances and requirements.

40. **Section 5.4: Hazardous Materials-** shall be complied with. Lessee shall not cause or permit any Hazardous substance (as hereinafter defined) to be brought, kept or used in or about the Premises by Lessee its officers, directors, owners, agents, employees, sublessees, assignees, contractors, subcontractors, invitees, or concessionaires except in Commercial quantities not in violation of applicable Environmental law (as defined below) and similar to those quantities usually kept on similar premises by others in the same business or profession. sPower, its officers, directors, owners, agents, employees, shall store, use and dispose of such materials in compliance with all applicable federal, state and local laws, including, without limitation, applicable Environmental law.

If the presence of any hazardous substance on, in or under the premises cause or permitted by sPower its employees results in any contamination of the premises the lessee shall promptly take all actions, at its sole expense, as are necessary to return the affected area to the condition existing prior to the introduction of any such hazardous substance (as defined below), including, without limitation, any investigation or monitoring of site condition or any clean up, remediation, response, removal, encapsulation, containment or restoration work required because of the presence of any such hazardous substance on, in or under the premises or any release or suspected release or threat of release of any such hazardous substance in the air, soil, surface water of ground water.

Spower shall obtain all necessary licenses, manifests, permits and approvals to perform the remedial work. "Hazardous Substance" means any hazardous or toxic substance, material, or waste which is or becomes regulated by any local governmental authority, the State in which the Premises are located, or the United States Government, including, without limitation, chemical or waster that is or shall be listed or defined as hazardous, toxic or dangerous uner applicable Environment Law, any other chemical, material or substance, exposure to which is prohibited, limited or regulated by and federal, state or local governmental authority pursuant to any environmental, health and safety or

similar law, county, ordinance, rule, regulation, order or decree and which may or could pose a hazard to the health and safety of occupants or uses of the premise or any part thereof, any adjoin property or cause damage to the environment. The lease between sPower and SILTLA full terms and conditions will be enforced by SITLA and not Kane County. Kane County agrees with the "applicable Environmental Law" sections contained in the lease in section5.4 and all laws noted.

41. **Section 5.5: Endangered Species:** Migratory Birds-Lessee shall take all actions reasonable necessary for the protection of endangered, threatened and sensitive species, as the same may be defined by federal or state law; migratory birds as defined by the Migratory Bird Treaty Act 16 U.S.C §703 *et seq*; and eagles as defined in the Bald and Golden Eagle Protection Act. 16 U.S.C §669a *et seq.*

42. **Section 5.6: Antiquities:** Antiquities requirements found in SITLA lease shall be complied with.

43. **Section 5.8: Fill Materials:** Lessee shall not allow any deposit of ballast, refuse, garbage, waste matter, chemical, biological or other wastes, hydrocarbons, any other pollutants, or other matter within or upon the Premises, except as approved in writing by the Lessor. If the Lessee fails to remove all non-approved fill material, wastes or materials described above from the premises, Lessor may at its option removed such materials and charge the Lessee for the cost of removal and disposal.

44. **Article 7: Insurance and Indemnity**: Insurance and Indemnity-All bonding reclamation and insurance requirements found in the SITLA/sPower lease shall be applied and followed.

45. **Section 7.3**: Utah State Code 63G-7-604 applies to this project.

46. **Section 11.2:** Intermediate Reclamation found in the SITLA/sPower lease shall be complied with for reclamation processes for this project.

47. **Section 11.3**: Waste Certification shall apply. Sewage and Water. Portable outhouses may be utilized during construction. Any on-site source of potable water or sewage treatment must be approved by the Utah Department of Health or DEQ, as applicable.

48. **Section 11.4:** Lease Bond May be Required-Kane County strongly suggests a bond be in place for this process, but will leave the liability for the project with SITLA.

49. **Section 11.7: Prior Improvements:** Kane County requires a chain link fence with warning signs around the perimeter of the project to protect the public and the structures. A gated access to or across the subject property, will be required and be opened for any inspections throughout the project life. As in the lease, any livestock fencing must be kept in place.

50. **Section 13.2:** Kane County agrees with the SITLA/sPower lease agreement and standards and leaves the liability of enforcement for such in SITLA's jurisdiction.

51. Local, State and Federal Permits: A solar power plant shall be required to obtain all necessary

permits from the Utah Department of Environmental Quality, including the Utah Division of Air Quality and the Utah Division of Water Quality, and the federal permits along with applicable permits required by Kane County and local utility companies affecting the power grid.

This conditional use permit may be revoked in whole or part or may be modified based on any failure to observe any of the conditions outlined herein or those enforceable in law or in equity.

***PLEASE NOTE**: Time limit found in 9-15A-5 is one year. Before building can begin all permits for state and federal regulations will need to be in place.

PROJECT DESCRIPTION

1.0 INTRODUCTION

The Glen Canyon West C Solar Project (the Project) is a utility scale solar power plant that will generate renewable solar electricity at a competitive cost with minimal environmental impacts. The Project is part of a larger composite of Sustainable Power Group (sPower) solar power plants proposed in Kane County, Utah (refer to Figure 1, *sPower Proposed Projects*). The Project facilities will operate year-round, producing electric power during daytime hours.

1.1 The Project

The Project will employ photovoltaic (PV) modules that convert sunlight directly into electrical energy without use of heat transfer fluid or cooling water. The facility will include onsite switchgear, communication lines, and generation-tie (gen-tie) lines. The Project would have a generating capacity of up to 140 megawatts (MW) alternating current (AC). The Project would be located on approximately 900 acres of vacant, undisturbed State of Utah School & Institutional Trust Lands Administration (SITLA) land in Kane County, Utah. Electricity will be delivered via gen-tie lines that will run from the solar power plant to a project substation with two potential points of interconnection (POI) to the grid that are discussed further in Section 2.3 below.

The PV modules convert sunlight striking the modules into low-voltage direct current (DC) power, which is subsequently transformed into AC power through an inverter. The PV modules are made of a semiconductor material through which electrons flow to convert light (photons) to electricity (voltage). The process is known as the PV effect.

The facility would generate emission-free electricity during the highest electricity demand time periods. The Project would offset approximately 283,380 tons of carbon dioxide equivalent annually that would have resulted from producing an equivalent amount of electricity utilizing generators powered by fossil fuels.

1.2 Project Objectives

The Project would benefit Kane County and the State of Utah by:

- Meeting the increasing demand for electricity generated from clean, renewable technology
- Diversifying of the State's energy portfolios
- Reducing greenhouse gas emissions
- Creating "green" jobs within the State
- Stimulating local economy during construction and operation of the Project

The Project's planning objective is to minimize impacts to the environmental and local community by:

- Using existing electrical distribution facilities, right-of-ways, roads, and other existing infrastructure where possible to minimize the need for new electrical support facilities;

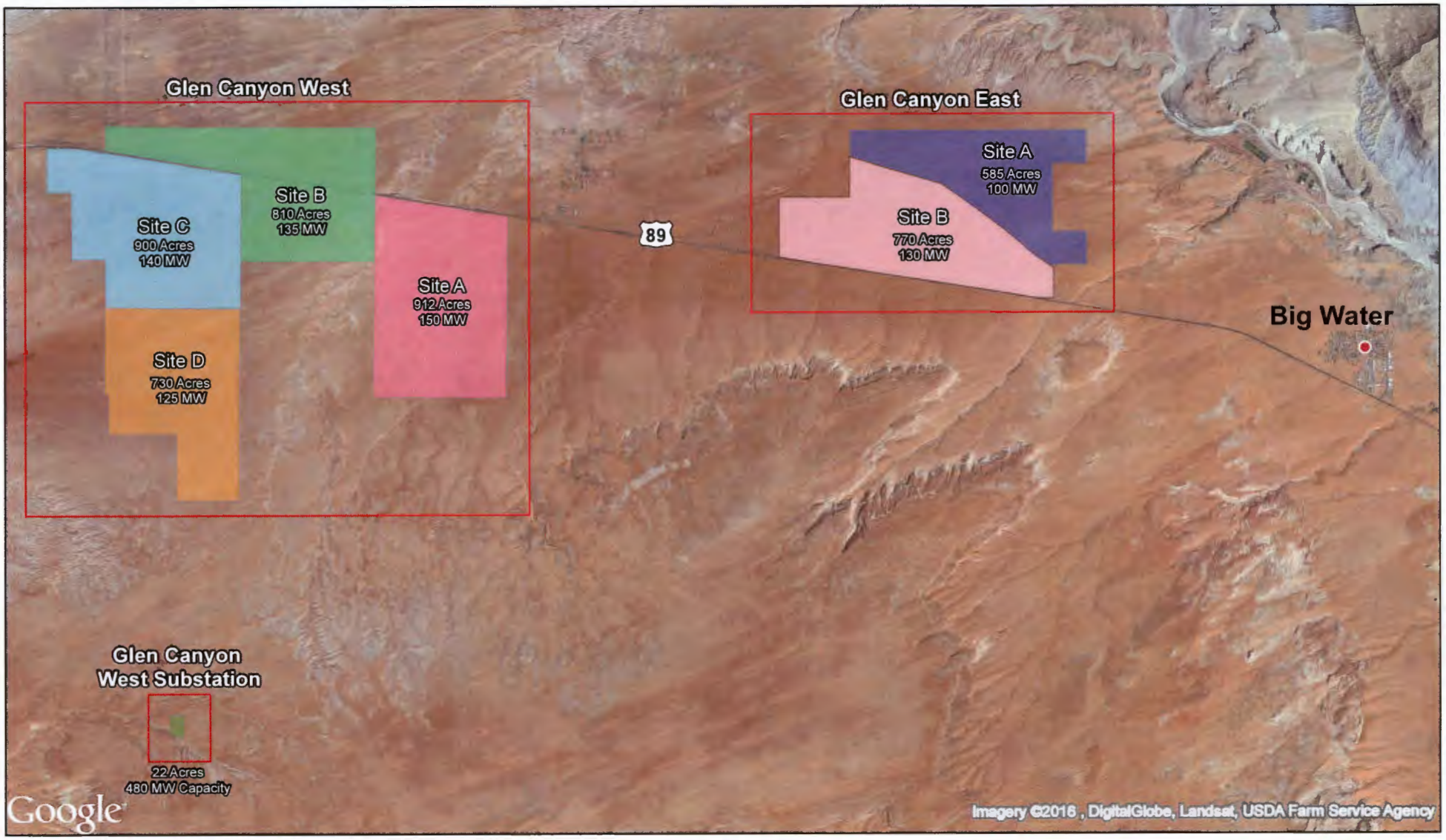

Kane County, UT	Map Details	Map Description	
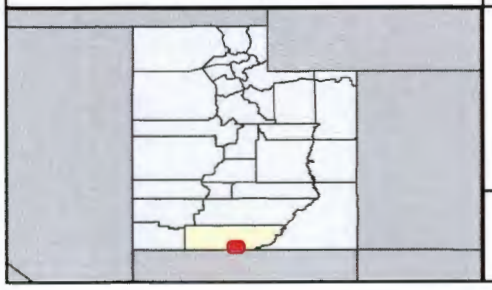	N Project Sites Permit Sites 0 1 2 Miles	Figure 1 sPower Proposed Projects	Author: JL Date: 5/12/2016 Version: 1.0 Type: Preliminary Site Map
		S·POWER SUSTAINABLE POWER GROUP	Glen Canyon Solar Projects

Kane County, UT	Map Details	Map Description	
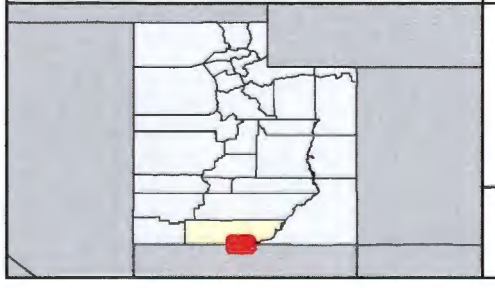	N Project Sites Permit Sites Proposed Transmission Glen Canyon Substation 0 2.5 5 Miles	Figure 1a sPower Proposed Projects	Author: JL Date: 7/26/2016 Version: 1.0 Type: Preliminary Site Map
		S·POWER SUSTAINABLE POWER GROUP	Glen Canyon Solar

- Minimizing impacts to threatened or endangered species or their habitats, wetlands and waters of the United States, cultural resources, and sensitive land use;
- Minimizing visual and aesthetic impacts through construction of a low profile solar PV facility;
- Develop the Project in accordance with SITLA Special Use Lease Agreement No. 1793 executed on December 22, 2014 and Amendment No. 1 to Special Use Lease Agreement No. 1793 executed on November 1, 2015; and
- Constructing, operating and maintaining the Project in compliance with local, state and federal regulations including, but not limited to, Kane County Chapter 24 regulations and Utah Code § 17C-4-103

2.0 PROJECT DESCRIPTION

The proposed Project location is within Kane County, Utah. The Project would require a Conditional Use Permit (CUP) from Kane County for the construction and operation of a solar power plant. The Project is part of a larger composite of sPower proposed solar power plants in Kane County, Utah that would be constructed in phases and operated for a minimum period of 30 years.

The Project would be comprised of the following elements:

- PV modules
- Module mounting system
- Balance of system and electrical boxes (e.g., combiner boxes, electrical disconnects)
- Electrical inverters and transformers
- Energy Storage Solutions
- Electrical AC collection system, including switchgear
- Data monitoring equipment
- Transmission and generation tie lines
- Access roads and security fencing
- Operations and Maintenance (O&M) Facility

2.1 Project Location

The Project would be located on approximately 900 acres of vacant, undisturbed land that is zoned "SITLA" in the southern portion of Kane County, Utah. Refer to Exhibit B1 for a legal description of the Project Site and Exhibit B2 for a parcel map of the Project Site.

The lands surrounding the Project Site are vacant, undisturbed lands, with U.S. Highway 89 running in an east-west direction north of the Project Site, and a small, sparsely populated residential community located approximately 0.25 miles to the north of the Project Site zoned "R-1", Residential. Lands to the immediate west are zoned Bureau of Land Management (BLM); with remaining lands surrounding the Project Site zoned "SITLA". sPower acknowledges that ranching, animal operations, and other

agricultural activities are the primary land use of the Grand Staircase-Escalante National Monument (GSENM) Multiple Use/Multiple Functions Grazing Zone which mainly consist of agricultural uses surrounding the Project Site. sPower is actively engaged with SITLA and local ranchers to work cooperatively and mitigate potential impacts to grazing and ranching activities.

2.2 Solar Generating Facility

The 140 MW-AC solar power plant would be designed for optimum performance and ease of maintenance. A series of PV module arrays would be mounted on racking systems typically supported by a pile-driven foundation design. The foundation design would be determined based on a geotechnical survey. The module mounting system or racking system would be a fixed-tilt or tracker PV array configuration oriented to maximize the amount of incident solar radiation absorbed over the course of the year. At the time of the building permit application, sPower will have specific design standards that will not be changed.

Electrical connections from a series of PV arrays would be channeled to combiner boxes located throughout the solar field. Electrical current would be collected and combined prior to feeding the inverters. The solar field would be laid out in a common PV block design to allow adequate clearance or access roads and adequate access for maintenance.

Inverters would be consolidated in areas to minimize cable routing, trenching, and minimal electrical losses. The AC output from the inverters would be routed through an AC collection system and consolidated within system switchgear. The final output from the solar power plant would be processed through a transformer to match the interconnection voltage. Electrical safety and protection systems would be provided to meet utility and regulatory codes and standards.

The figures prepared for this Project include a Parcel Map (Exhibit B2) and Site Plan (Exhibit C1) prepared per Kane County CUP Application requirements. Additional information for the solar power plant is provided in the following sections.

2.2.1 Photovoltaic Modules

The actual total number of PV modules would depend on the technology selected, optimization evaluation, and detailed design. The market conditions, economic considerations, and environmental factors would be taken into account during the detailed design process. The following PV module technologies or equivalent are planned to be incorporated into the solar power plant:

- PV thin-film technology
- PV crystalline silicon technology
- Stationary fixed-tilt modular configuration
- Tracking module configuration

The modules would be oriented toward the south and angled at a degree that would optimize solar resource efficiency. For the tracking configuration, the modules would rotate from east to west over the course of the day. Modules would be non-reflective and highly absorptive. During construction, the PV modules would be delivered to the Project location to support the installation schedule.

2.2.2 Standard Installation, Array Assembly, and Racking

There are a variety of module mounting systems from various manufacturers that are available in the solar industry. The majority can be mounted on a variety of foundations. Fixed-tilt, single- axis trackers, and dual-axis trackers provide various levels of energy efficiencies. These systems are under consideration for the Project. The final system design would be determined by using optimization evaluations and economic assessments.

The module mounting system provides the structure that supports the PV module arrays. The foundations are typically cylindrical steel pipes/piles driven into the soil using pneumatic techniques, similar to hydraulic pile driving. The final foundation design would be determined based on the geotechnical survey for the Project location. Once the foundation has been installed, the module racking system would be installed to support the PV modules. For a tracking configuration, motors would be installed to drive the tracking mechanism.

The module mounting system would be oriented in rows within a PV design block reflecting a standard and uniform appearance across the facility. The module configuration would be uniform in height and width, although the actual height of the arrays will vary due to ground elevations. Grading activities would be limited to access roads where appropriate to minimize dust generation throughout the construction and operation of the facility.

2.2.3 DC and AC Collection, Inverters, and Transformers

Modules would be electrically connected into strings. Each string would be funneled by electrical conduit underground to combiner boxes located throughout the solar field power blocks. The output power cables from the combiner boxes would again be consolidated and feed the DC electricity to inverters which convert the DC to AC. Each inverter will be fully enclosed, pad mounted, and stand approximately 95 inches in height. The AC output of two inverters will be fed via underground cable into the low-voltage side of the inverter step-up transformer, generally within 20 feet of the inverters.

Underground electrical cables would be installed using ordinary trenching techniques. Trenching is expected to be relatively shallow. All construction activity (trenching, electrical routing, backfilling, and compaction) would be conducted in accordance with local, State, and federal codes.

2.2.4 Energy Storage

Energy storage would include an intelligent battery system onsite. The battery storage technology is a modular and fully enclosed power storage system that uses telecommunication systems and real-time control software to charge and discharge the battery according to power delivery needs. Typical modular energy storage solutions are approximately 102 inches in height and 20 to 40 feet in length. The energy storage solution would be located near inverter stations or near switchgear, and will depend on the technology chosen and needs of the overall system.

2.2.5 Solar Power Plant Switchgear

The potential switchgear area would be excavated for the transformer equipment, control building foundation, and oil containment area. Reinforced concrete is used for foundations.

Structural components in the switchgear areas would include:

- Transformers, switchgear, and safety systems
- Footings and oil containment system for transformers

The transformer, approximately 87 inches in height, would be pad mounted and enclosed together with switchgear and a junction box. The high-voltage output of the transformer would be combined in series via underground collector cable to the junction box of the transformer in closest proximity. Distances can range from 60 feet to 700 feet throughout the Project site. The collector system cables would be tied at underground junction boxes to the main underground collector cables, composed of a larger gauge wire, to the location of the generator step-up (GSU) transformer. The main collector cables would rise into the low-voltage busbar and protection equipment that is enclosed together with the GSU. The primary switchgear includes the main circuit breaker and utility metering equipment, and would be enclosed separately and pad mounted together with the GSU. Both the GSU and the primary switchgear stand approximately 87 inches in height. The output of the switchgear would be the start of the gen-tie.

2.2.6 Data Collection System

The Project would be designed with a comprehensive Supervisory Control and Data Acquisition (SCADA) system for remote monitoring of facility operation and/or remote control of critical components. Within the Project site, the fiber optic or other cabling required for the monitoring system would be installed throughout the solar field leading to centrally located (or series of appropriately located) SCADA system cabinets. The telecommunications connections to the SCADA system cabinets are either wireless or hard wired.

The system would also include a meteorological (met) data collection system. The met station would have the following weather sensors: a pyranometer for measuring solar irradiance, a thermometer to measure air temperature, a barometric pressure sensor to measure atmospheric pressure, and two wind sensors to measure speed and direction. These sensors would be connected to a data logger to compile the data for transmission to the Data Collection Center.

2.3 Points of Interconnection

The Project has two potential points of interconnection (POI) including 1) the existing Glen Canyon Substation located near Lake Powell, and 2) the existing Navajo Crystal 500 kV transmission line located 1.5 miles south of the Glen Canyon West D Project Site. Both POIs are described in more detail below:

- POI Option 1 would traverse from the Glen Canyon West A Solar Project Site to the existing Glen Canyon Substation, located approximately 20 miles to the southeast, near Lake Powell. The Glen Canyon West Solar Projects would connect to a project substation located on the northeastern portion of the Glen Canyon West A Solar Project Site via multiple underground of overhead 34 kV gen-tie lines (refer to Exhibit C1, *Site Plan*). A new gen-tie corridor would be constructed along Highway 89, interconnecting the project substation to the existing Glen Canyon Substation at a voltage of 345 kV. sPower will coordinate with all authorities having jurisdiction to acquire necessary interconnection agreements and encroachment permits prior to initiating construction of the Project. Refer to Figure 1a above for an approximate location of the utility corridor.

- POI Option 2 would interconnect the Project to sPower's proposed Glen Canyon West Substation located approximately 1.5 miles south of the Glen Canyon West D Solar Project Site, via multiple underground or overhead 34 kV gen-tie lines. A 150 foot easement will be provided by SITLA to connect the Glen Canyon West Projects to sPower's proposed Glen Canyon West Substation. A gen-tie line would run from sPower's proposed Glen Canyon West Substation to a newly constructed switching station at the Navajo-Crystal POI at a voltage of up to 500 kV. sPower will coordinate with all authorities having jurisdiction to acquire necessary interconnection agreements and encroachment permits prior to initiating construction of the Project. Refer to Figure 1a above for an approximate location of POI Option 2.

2.4 Kane County Municipal Code Chapter 24 Compliance

Chapter 24, Solar Power Plants, of the Kane County Municipal Code establishes minimum requirements and regulations for the placement, construction and modification of solar power plants. The proposed Project shall comply with all applicable measures codified in Chapter 24 of the Kane County Municipal Code.

2.5 SITLA Lease Agreement Compliance

sPower has entered into lease agreements with SITLA (Special Use Lease Agreement No. 1793 and Amendment No. 1 to Special Use Lease Agreement No. 1793) on December 22, 2014 and November 1, 2015 for the purpose of constructing, operating, and maintaining a commercial solar electric generating facility, together with transmission lines and ancillary facilities at the Project Site (refer to Exhibit B4). As stated in the lease agreements, sPower will adhere to all mutual promises and covenants contained in the lease agreements.

Article 5, Regulatory Compliance, of Special Use Lease Agreement No. 1793 specifies environmental regulatory components including, but not limited to, hazardous materials, endangered species, antiquities, wildfires, and waste. sPower is committed to complying with all regulatory components contained in the lease agreements, including preparation of a Biological Resources Technical Report and a Cultural Resources Technical Report. Both reports will be submitted to Kane County and SITLA prior to construction. In the event endangered species or resources of historical or cultural significance are identified at the Project Site, sPower will comply with all federal and State regulations to protect said resources. Additional measures related to hazardous materials, wildfires, and waste are discussed below.

2.6 Project Construction

Project construction would consist of three major phases: (1) site preparation; (2) PV system installation; and (3) testing. sPower is committed to implementing Best Management Practices (BMPs), including those mandated by Kane County, during all construction phases of the Project. BMPs for stormwater, erosion control, and fugitive dust emissions would be prepared and approved prior to the start of construction. The construction timeline for the Project is anticipated to last 18 to 24 months.

sPower anticipates close collaboration with Kane County during the permitting process to identify and manage any environmental conditions specific to the Project. Through the permitting process, sPower will implement all required measures and BMPs as determined by Kane County and responsible agencies.

2.6.1 Site Preparation

Construction of the PV facility would begin with initial clearing and grading (if required) of the staging areas. Access to the Project Site would be improved to appropriate construction standards. The staging areas would typically include temporary construction trailers, worker parking, truck loading and unloading facilities, and an area for assembly. Road corridors would be surveyed, cleared, and graded to bring equipment, materials, and workers to the areas under construction. Buried electrical lines, PV array locations, and the locations of other facilities may be flagged and staked to guide construction activities. BMPs for stormwater and erosion control would be employed during site preparation, and water truck refilling stations (if required) will be established for dust control.

2.6.2 PV System Installation

PV system installation will include earthwork, grading, and erosion control, as well as erection of the PV modules, supports, and associated electrical equipment. System installation will begin with teams installing the mounting and steel piers support structures. The exact design will be finalized pending specific soil conditions, but will likely include pneumatically driven H-pile steel beams attached to a fixed or tracker racking system. This will be followed by panel installation and electrical work.

Concrete may be required for the footings, foundations, and will be required for pads for the inverters and transformers. Concrete will be produced at an off-site location by a local provider and transported to the Project site by truck. Final concrete specifications will be determined during detailed design engineering and will meet applicable building codes.

The PV modules require a moderately flat surface for installation. Some earthwork, including grading, fill, compaction, and erosion control cultivation may be required to accommodate the placement of PV arrays, foundations or footings, access roads, and drainage features. A Utah Department Discharge Elimination System (UPDES) Construction Storm Water Permit will be obtained by sPower. Construction of the PV arrays will include installation of support beams, module rail assemblies, PV modules, inverters, transformers, and buried electrical cables.

Wastes that will be generated during construction may include the following: cardboard, wood pallets, copper wire, scrap steel, common trash, and wood wire spools. sPower does not expect to generate hazardous waste during construction of the proposed Project. However, field equipment used during construction will contain various hazardous materials such as hydraulic oil, diesel fuel, grease, lubricants, solvents, adhesives, paints, and other petroleum-based products contained in construction vehicles.

2.6.3 Construction Workers, Hours, and Equipment

The construction activities are expected to be completed in approximately 18 to 24 months. The on-site workforce will consist of laborers, various skilled trades, supervisory personnel, support personnel, and construction management personnel. Construction will generally occur during daylight hours, Monday through Friday. Weekend and non-daylight work hours may be necessary to make up schedule

deficiencies, or to complete critical construction activities. Construction activities will be conducted consistent with Kane County regulations regarding hours of construction. If weekend or night hours are needed, an sPower representative will contact the Kane County Land Use Administrator to have CUP conditions amended.

The project will generate an estimated 200 new jobs during the construction phase and will provide approximately two (2) full time position over the life of the facility for O&M activities.

2.6.4 Emergency and Shutdown Procedures

To ensure the safety of all employees working on the Project during construction, sPower will develop and implement an Emergency Response Plan for the Project in accordance with Code of Federal Regulation 1910.38 established by the Occupational Safety and Health Administration (OSHA). Key personnel will be designated to train all employees working on the Project, and will be responsible for administering emergency and shutdown procedures in the event of an emergency. Emergency and shutdown procedures will be clearly displayed in all construction trailers, along with contact information for emergency service providers and treatment facilities. Appropriate warning signage will be placed on all towers, electrical equipment, and Project Site ingress and egress points. Prior to construction, sPower will notify all emergency service providers of construction activities occurring at the Project Site and inform them of all emergency and shutdown procedures, including who needs to be contacted in case of an emergency.

sPower will coordinate its development of the Emergency Response Plan with the Kane County Fire Warden to ensure satisfactory safety measures are in place in the event of a wildfire. Safety measures shall include fire suppression methods that can be immediately deployed during both construction and operation of the Project. A water tank will be constructed on the Project Site to supply water to emergency service providers and regularly maintained with the guidance of the Kane County Fire Warden.

The Project will comply with the defensible space requirements of the Utah Wildland-Urban Interface Code throughout construction of the Project. Ongoing maintenance will be provided to ensure removal of excessive grass, weeds, and other flammable materials from the defensible space area. sPower will facilitate training for emergency service providers related to the specific hazards of the Project.

2.6.5 Transportation

As stated above, the Project will generate an estimated 200 new jobs during the construction phase for each project. Construction employees would generally arrive by private automobile with an estimated 25 percent of them carpooling. Therefore, the maximum amount of employee trips per day to the Project Site would be approximately 150. Additionally, a project of this size typically requires approximately 66 truck trips per day for the duration of project construction. Therefore, the project has the potential to generate up to 216 trips per day to the Project Site during construction. Table 2.6.5.1 below provides a summary of the trip generation estimates for a solar power plant of this size. sPower anticipates relatively equal amounts of personnel coming from the City of Kanab, Utah and the City of Page, Arizona populations east and west of the Project Site.

Table 2.6.5.1
Trip Generation Estimates

Trip Type	Maximum Daily Construction Traffic
Employee	
Passenger Vehicles	200
25% carpool	(50)
Total Employee Trips	150
Trucks	
Heavy Haul	39
Medium Duty	27
Total Truck Trips	66
TOTAL DAILY TRIPS	**216**

Access to the Project Site will be provided via U.S. Highway 89, most likely at the northeastern section of the Project Site, approximately 915 feet west of Milepost 16 (refer to Exhibit C1, *Site Plan*). To ensure the project does not impact the local circulation network or cause significant traffic on U.S. Highway 89, sPower will develop and implement a Transportation Management Plan in coordination with the Kane County Engineer and Utah Department of Transportation (UDOT) prior to construction and issuance of a building permit. The Transportation Management Plan will identify potential hazards associated with the Project, outline safety and traffic calming measures, and provide guidelines for accessing the Project Site during construction and emergency situations. The Transportation Management Plan will designate specific routes for employees, delivery trucks, and emergency vehicles, and will specify design features and upgrades needed for safe and adequate ingress/egress and internal service roads. Internal service roads will be unpaved and maintained throughout construction of the Project. Deliveries to the Project Site will be facilitated during off-peak traffic hours and comply with regulations governing oversized loads. sPower will document existing roadway conditions and restore any roadways damaged during construction to their pre-existing condition. Additionally, sPower will obtain all necessary permits from UDOT prior to construction and issuance of a building permit of the Project.

Equipment, permanent materials, and commodities for the Project will be transported to the Project Site via rail and state and/or interstate highways. Heavy hauls will be shipped via rail to nearest active railroad spur for offloading and transported by truck to the Project Site. Heavy haul trucks with multiple axles will be employed to distribute loads, as required. All equipment and material deliveries will utilize the Project Site access.

Truck deliveries of equipment and materials will occur beginning with the initial construction notice to proceed and continuing through the duration of the Project construction process. Initial truck deliveries will include heavy haul trucks for importing panels, project materials, followed by concrete trucks for installation of the solar field and major foundations, and deliveries of reinforcing steel. Electrical cabling and piping materials for buried piping will be delivered to the Project Site early in the construction period corresponding to approximately the time frame for foundation installation. Deliveries of large major equipment will commence at about midpoint of the construction period.

2.6.6 Parking and Staging Areas

sPower will ensure adequate parking is provided for construction workers at the Project Site and prohibit parking along U.S. Highway 89. In addition to parking, the Project will require a temporary staging area for storing materials, assembling components, refueling equipment, and installing construction trailers. The parking and staging area will most likely be located on the northern portion of the Project Site, to minimize transportation on un-paved roads. Parking and staging signs will be clearly placed at ingress and egress points to direct traffic to the proper location. Refer to Exhibit C1, *Site Plan*, for a depiction of the temporary parking and staging areas.

2.6.7 Hazardous Materials

Construction of the Project would involve small quantities of commonly used hazardous materials, such as fuels and oils, to operate construction equipment. The use, storage, and disposal of hazardous materials and wastes would be governed according to regulations established by OSHA and the Utah Department of Environmental Control, Division of Waste Management and Radiation Control. This regulatory structure would ensure that safety measures and precautions are implemented, thereby reducing potential impacts associated with an accidental spill or release of hazardous materials.

sPower will prepare and implement an Emergency Response Plan for the Project that outlines safety procedures in the event of an accidental spill or release of hazardous materials. Key personnel will be designated to train all employees working on the Project, and will be responsible for administering safety procedures in the event of an accidental spill or release of hazardous materials. Safety procedures will be clearly displayed in all construction trailers, along with contact information for emergency services and treatment facilities.

Prior to construction and issuance of a building permit, sPower will conduct a Phase I Environmental Site Assessment (ESA) to determine the potential for existing hazardous materials at the Project Site. In the event existing hazardous materials are discovered at the Project Site, sPower will work with SITLA to ensure full cleanup and proper disposal of hazardous materials in accordance with federal and State regulations.

2.6.8 Waste and Recycling

Construction waste would be generated from installation of the solar arrays and related facilities. Construction waste generation is expected to be minimal and consist of mostly recyclable materials such as cardboard, steel, and electrical wiring. sPower's Engineering, Procurement, and Construction (EPC) contractor that will be responsible for construction of the Project will carefully disassemble and recycle shipping containers and solar panel packaging to minimize solid waste impacts. The EPC contractor will contract with a waste and recycling service provider to ensure all waste generated from construction of the Project is disposed of in accordance with federal and State regulations. Methods of waste disposal and recycling will be coordinated with the Kane County Land Use Authority. The EPC contractor will store, collect, and dispose of solid waste in such a manner as to prevent fire and health hazards, rodent harborage, insect breeding, accidents, and odor in accordance with Kane County solid waste rules and protocol. The EPC contractor will ensure that no littering of the Project Site or neighboring properties will occur during construction.

Waste and recycled materials will be separated and stored in large containers at the Project Site, and then hauled to an off-site facility for proper disposal. Options for waste and recycling services may include a nearby municipality such as Page, Arizona who delivers their solid waste to Purgatory Valley in Washington County, or contract with a private waste hauler such as Republic Services located in Page, Arizona, approximately 27 miles from the Project Site. It is expected that sPower or its contractor will enter into waste services agreements to coordinate with the local service company to handle waste during construction.

2.6.9 Sanitation Services

No wastewater facilities exist at the Project Site and no such facilities would be constructed for the Project. Portable restroom facilities would be provided and maintained by sPower's EPC contractor during construction.

2.6.10 Water Supply

It is anticipated that a 140 MW project on 900 acres would use approximately 200-250 acre-feet of water during construction. Prior to initiation of construction, sPower will secure water rights from local sources to the approval of the Kane County Land Use Authority. It is anticipated that water will be supplied from a newly constructed on-site well or trucked in from a local provider. Water will primarily be used for dust control on un-paved roads, and will be applied via water trucks. Additionally, as stated above, a water tank will be constructed on the Project Site to supply water to emergency service providers and regularly maintained with the guidance of the Kane County Fire Warden.

2.6.11 Fugitive Dust Control Plan

Construction of the Project has potential to emit fugitive dust during earth-moving activities and operation of construction equipment on un-paved roads. The Utah Department of Environmental Quality regulates fugitive dust emissions via Rule R307-309, requiring development of a Fugitive Dust Control Plan (R307-309-6). sPower will develop and submit a Fugitive Dust Control Plan to the Utah Division of Air Quality prior to the start of construction. sPower will closely monitor fugitive dust at the Project Site, ensure that all construction activities comply with R307-309, and adhere to the measures outlined in the approved Fugitive Dust Control Plan. Additionally, the final Site Plan will include information related to how dust control will be accomplished for all disturbed on-site area during both construction and operation of the Project.

2.6.12 Construction Noise

Health and Public Safety Ordinance 4-3-3-B-25 prohibits noise that is inconsistent with a zoning area between the hours of 11:00 p.m. and sunrise. As the Project Site is zoned "SITLA", the County does not have adopted standards for noise on SITLA lands. Surrounding lands are primarily zoned SITLA with the exception of a small, sparsely populated residential community located approximately 0.25 miles to the north of the Project Site zoned "R-1", Residential.

Noise emanating from construction activities would be consistent with the County's Health and Public Safety Ordinance by occurring during daylight hours. Specifications regarding hours of construction will be followed per Kane County regulations. If weekend or night hours are need on an as-needed basis,

sPower will coordinated with the Kane County Land Use Administrator to have the CUP conditions amended per Land Use Ordinance 9-15A-2-E-5.

The loudest construction activity at the Project Site would occur while driving piles for the solar arrays and tracking system. According to the U.S. Department of Transportation, Federal Highway Administration, pile drivers have the potential to generate noise levels up to 101 A-weighted decibels (dBA) when measured at a distance of 50 feet. As noise generated from a stationary source attenuates at a rate of six (6) dBA per doubling of distance, it can be reasonably assumed that the nearest habitable structures (residences located approximately 0.25 miles to the north of the Project Site) would experience maximum noise levels of approximately 73 dBA during construction. Pile driving would only occur over a short period of time during construction (less than one week), and notices would be sent to neighboring residences prior to pile driving. Only a small section of the Project Site that requires pile driving would potentially impact neighboring residences. sPower will coordinate with Kane County Land Use Authority to ensure noise impacts to neighbors during pile driving are minimal and can be mitigated. Therefore, construction noise emanating from the Project Site is not anticipated to have a significant impact on neighboring residences for the duration of construction activities.

As stated above, construction traffic would access the Project Site via U.S. Highway 89. U.S. Highway 89 experiences high levels of tourist traffic throughout the year due to its close proximity to Lake Powell and the Grand Canyon. Therefore, it is anticipated that construction traffic would not significantly increase the existing mobile noise along U.S. Highway 89, and would not impact local residences in the vicinity of the Project Site.

2.6.13 Landscaping

The Project would include installation of low-profile solar panels, with heights approximately four (4) feet from the center axis. Exhibit C1, *Site Plan*, incorporates a 50-foot setback from U.S. Highway 89, providing a buffer of existing vegetation that would screen views of the Project from U.S. Highway 89. The 50-foot setback utilizes existing vegetation and topography to shield views from traffic along U.S. Highway 89. Furthermore, no habitable structures are located within the immediate vicinity of the Project Site. Therefore, the views of local residents would not be impacted as a result of the Project.

2.7 Project Operation and Maintenance

Upon commissioning, the Project would enter the operational phase. For the duration of the operational phase, the Project would be operated remotely and monitored by on-site staff for security and maintenance purposes. As the Project's PV arrays produce electricity passively with minimal moving parts, maintenance requirements would be limited. Any required planned maintenance would be scheduled to avoid peak load periods, and unplanned maintenance would be typically responded to as needed depending on the event. An inventory of spare components would be readily available from a remote warehouse facility.

Other operational details are summarized in the following sections.

2.7.1 Operations

sPower will ensure consistent and effective facility operations by:

- Responding to automated alarms based on monitored data, including actual versus expected tolerances for system output and other key performance metrics
- Communicating with customers, transmission system operators and other entities involved in facility operations
- Designating a site supervisor to monitor and implement emergency and normal shutdown procedures

2.7.2 Maintenance

Project maintenance performed on the site would consist of equipment inspection and replacement. Maintenance would occur during daylight hours, when possible. However, maintenance activities on the PV modules and DC systems would be typically performed at night. Maintenance program elements include:

- Managing a group of prequalified maintenance and repair firms who can meet the O&M needs of the facility throughout its life;
- Implementing a responsive, optimized cleaning schedule;
- Responding to plant emergencies and failures in a timely manner;
- Maintaining an inventory of spare parts to ensure timely repairs and consistent plant output;
- Maintaining a log to effectively record and track all maintenance problems; and
- Performing maintenance on the site as required to clear obstructive ground cover

2.7.3 Remote Monitoring of the Project

All important aspects of the Project will be monitored 365 days a year from a remote location utilizing a Supervisory Control and Data Acquisition (SCADA) system. Safe, effective and efficient operation of the Project is dependent on the operator receiving accurate information on all environmental measurements which affect production. These measurements include solar irradiation, ambient temperature, back of module temperature and wind speed. These environmental characteristics are reported by various sensors—pyranometers for irradiance, thermometers for temperatures and anemometers for wind speed. Other characteristics of the Project are also reported in real time such as current production, voltage, amperage, power quality and the status of all circuit protection devices. Circuit protection devices include the ability to report the status of their protective relays continuously as are the meters which report the electrical characteristics of the Project.

Signals from all sensors, meters and circuit protection devices are accumulated in to one or more data loggers which report via secure internet connections to sPower's monitoring provider. The software that comprises the monitoring system is set up to send alarms when one or more conditions arise that compromise the safe and efficient operation of the plant. sPower has operators on duty in its control center during all hours when production is expected. If an emergency should arise in the off hours, personnel are assigned to take "on-call" messages in the case of emergencies.

2.7.4 Emergency and Shutdown Procedures

As stated above, sPower will develop and implement an Emergency Response Plan for the Project. All employees working on the Project during operations will be trained in emergency and shutdown procedures. Signs will be clearly marked at the Project Site for emergency vehicle ingress and egress.

The Project will comply with the defensible space requirements of the Utah Wildland-Urban Interface Code throughout operation of the Project. Ongoing maintenance will be provided to ensure removal of grass, weeds, and other flammable materials from the defensible space area. sPower will facilitate training for emergency service providers related to the specific hazards of the Project.

2.7.5 Transportation

The Project will primarily be operated remotely and monitored by on-site staff for security and maintenance purposes. Therefore, transportation to and from the Project Site will be minimal and would not adversely affect traffic conditions along U.S. Highway 89. As stated above, signs will be clearly marked at the Project Site in the event that emergency vehicles need to access the Project Site. The paved driveway providing access to the Project Site via U.S. Highway 89 and unpaved internal road system will be maintained as needed during the life of the Project.

2.7.6 Water Supply

During operation of the Project, minimal water would be used for solar panel washing on an annual basis and periodically for landscaping. As stated above, sPower will secure water rights from local sources to the approval of the Kane County Land Use Authority. It is anticipated that water will be supplied from a newly constructed on-site well or trucked in from a local provider.

2.7.7 Waste and Recycling

Waste will not be generated during operation of the Project.

2.7.8 Operational Noise

Land Use Ordinance 9-24-3-E states that no solar power plant shall exceed 65 dBA as measured at the property line or 50 dBA as measured at the nearest neighboring habitable structure. Primary sources of operational noise would include the inverters and solar tracker system, and would be limited to daytime hours when the Project is generating electricity.

The Project will utilize the new Power Electronics HEC-US PLUS outdoor inverters and the Array Technologies HZ v2 Tracker. The HEC-US PLUS outdoor inverter has a measured noise level of less than 70 dBA when measured at a distance of 1 meter (3.28 feet), and the HZ v2 Tracker has a measured noise level of 62 dBA when measured at a distance of 100 feet. In order to remain compliant with Land Use Ordinance 9-24-3-E, the HEC-US PLUS outdoor inverters must be located at least 6 feet from the Project's property line and 33 feet from the nearest habitable structure; and the HZ v2 Tracker must be located at least 71 feet from the Project's property line and 400 feet from the nearest habitable structure. Should a different inverter or tracker be selected, calculations will be made to ensure that the noise generating device will be located a sufficient distance away so that noise does not impact nearby residences. As stated above, the nearest habitable structures are located approximately 0.25 miles to

the north of the Project Site. Therefore, it can be reasonably inferred that noise associated with operation of the Project would result in a negligible impact and would be compliant with Land Use Ordinance 9-24-3-E.

2.7.9 Light and Glare

The Project would include inward facing, low-level security lighting at ingress and egress points at the Project Site. Project lighting would be directed downward onto the Project Site and would be shielded to illuminate intended areas only. The project substation would be lit to a minimum 22 lux (equivalent to 2 foot candles) when staff are at the Project Site working, but would not be lit when the station is unstaffed. These lighting measures would reduce the amount of light trespass falling outside the Project Site boundaries.

The glare and reflectance levels from a given PV solar power plant are decisively lower than the glare and reflectance generated by the standard glass and other common reflective surfaces found in urban environments. The PV panels used for the Project would be dark blue or black with minimal light reflection and contain a microscopically irregular surface designed to trap incident rays of sunlight. The PV panels would utilize high-transmission, low-iron glass, which absorbs more light, producing smaller amounts of glare and reflectance than normal glass. In addition to the superior refractive/reflective properties of solar glass versus standard glass, many PV panels also utilize stippled solar glass for their panels. Stippled glass is "textured" and allows more light energy to be channeled/transmitted through the glass while diffusing (weakening) the reflected light energy. "Light trapping" would also be integrated into the PV panels. "Light trapping" is the practice of using additional techniques like mirrors and natural surface textures to "trap" light within the layers of the solar cell, allowing even less light to escape by reflection. While the Project is not anticipated to result in significant glint and glare impacts to nearby residents or motorists on U.S. Highway 89, sPower will work to mitigate glint and glare through selection of technology and the Project footprint to the maximum extent practical.

As of June 2013, there were over 30 solar project in operations at airports in 15 different states. Solar installations have been successfully located at or near US international airports in Boston, New York, San Francisco, and Denver, among others. As the nearest airport to the Project Site is the Page Municipal Airport located approximately 20 miles to the southeast, it is not anticipated that light and glare emanating from the Project Site would impact aircraft flying over the Project Site.

2.7.10 Security

The Project will be monitored by security staff during operations. An appropriate security fence with warning signs will be placed around the perimeter of the Project and all electrical equipment will be locked. sPower will coordinate with the Kane County Fire Marshall to install an approved, electronically controlled security access gate at the Project Site. As stated above, the Project would include inward facing, low level security lighting and cameras at ingress and egress points.

2.7.11 Electric and Magnet Fields

Potential health effects from exposure to electric fields from power lines is negligible because magnetic fields attenuate rapidly. The solar facility has relatively low voltage and amperage and electromagnetic fields attenuate to background levels in less than 20 to 30 feet, or within the setback from project fences. Even within the facility, voltage and amperage is similar to that in other neighborhoods that

contain low and medium voltage distribution lines. Out of the sites, the highest potential for EMF is from transmission lines. Transmission lines that will be installed will be similar to already existing transmission lines in the area. Induced currents and voltages on conducting objects near the proposed gen-tie lines represent a small potential hazard; but these gen-tie lines do not pose a threat if the conducting objects are properly grounded. As part of the siting and construction process for the Project, sPower will site all proposed gen-tie lines with nothing underneath them that would conflict with grounding. Potential health effect from exposure to electric fields from the Project would be negligible.

2.7.12 Telecommunications Interference

Corona or gap discharges related to high frequency radio and television interference impacts are dependent upon several factors including the strength of broadcast signals and are anticipated to be very localized if it occurs at all. Individual sources of adverse radio/television interference impacts can be located and corrected on the power lines. Conversely, magnetic field interference with electronic equipment such as computer monitors can be corrected through the use of software, shielding, or changes at the monitor location. After energizing the gen-tie line, sPower will respond to and document all radio/televisions/equipment interference complaints received and the responsive action taken. These records will be made available to the County upon request. With sPower's 100+ solar project, no issues have occurred with regards to telecommunications interference. On-site facilities are dependent on radio frequencies, and our operating systems have shown not to impact them.

2.8 Project Decommissioning

sPower will decommission and remove the system and its components at the end of the life of the Project. The Project site could then be converted to other uses in accordance with applicable land use regulations in effect at that time. All decommissioning and restoration activities will adhere to the requirements of the appropriate governing authorities and will be in accordance with the SITLA Lease Agreements and all applicable federal, state and Kane County regulations.

EXHIBIT "B"

Exhibit B1: Legal Description
Exhibit B2: Parcel Map
Exhibit B3: Notarized Affidavit
Exhibit B4: SITLA Lease Agreements

LEGAL DESCRIPTION

Township 43 South, Range 1 East:

- Section 5: S2, SW4NW4, Those portions of Lots 3 and 4, SE4NW4, and S2NE4 lying south of US 89) – 468.12 acres
- Section 6: Those portions of Lots 1 and 2 lying south of US 89, S2NE4, E2SE4, E2E2E2W2SE4 – 195.16 acres
- Section 8: N2N2, N2S2N2 – 240.00 acres

Total acres: 903.28 acres

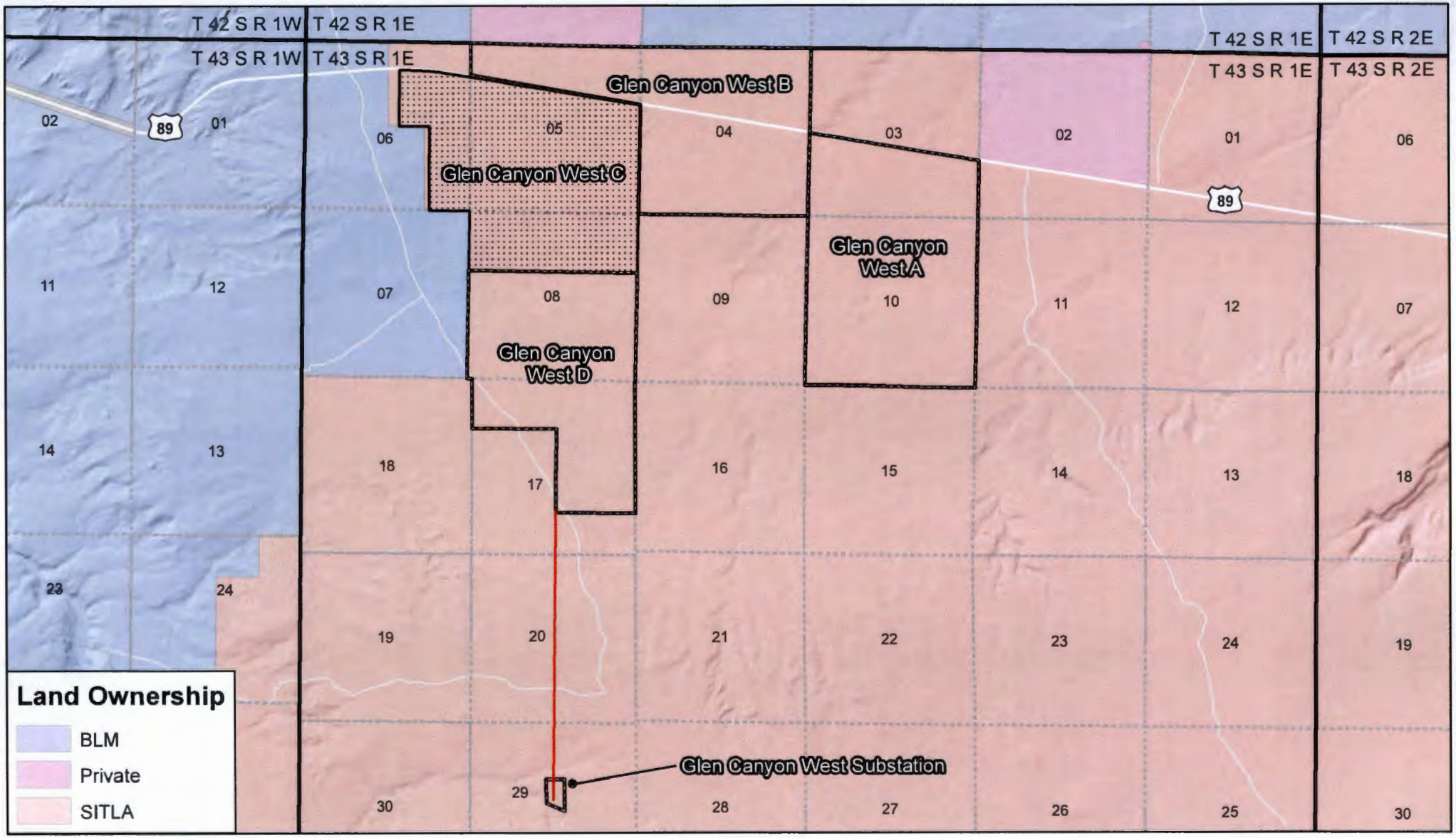

Kane County, UT	Map Details	Map Description	
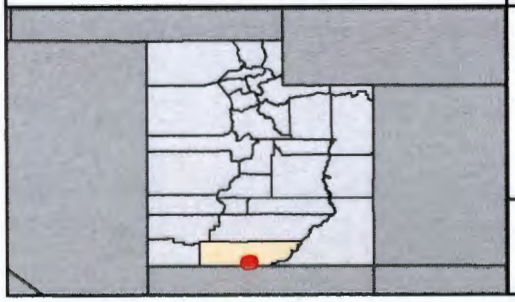	N 150' SITLA Easement Glen Canyon West C Proposed Projects 0 0.75 1.5 Miles	**Exhibit B2 - Parcel Map** Land included in Conditional Use Permit application. Please refer to Exhibit B1, Legal Description.	Author: JL Date: 5/12/2016 Version: 1.0 Type: Exhibit
		S·POWER SUSTAINABLE POWER GROUP	Glen Canyon West C Solar Project

State of Utah
School & Institutional
Trust Lands Administration

Gary R. Herbert
Governor

Spencer J. Cox
Lieutenant Governor

David Ure
Director

CENTRAL AREA OFFICE
130 North Main Street
Richfield, UT 84701-2154
435-896-6494
435-896-6158 (Fax)
www.trustlands.utah.gov

May 5, 2016

Kane County Land Use Authority

180 West 300 North

Kanab, UT. 84741

RE: Owner/Agent Authorization

Dear Sirs:

This letter is to notify you that the Utah School and Institutional Trust Lands Administration (SITLA) is the owner of the properties listed below and in the Conditional Use Permit (CUP) Application submitted by our lessee, Sustainable Power Group (sPower). Please refer to the attached parcel maps for a depiction of the SITLA lands leased to sPower.

GLEN CANYON EAST SOLAR PROJECTS

Township 43 South, Range 2 East:

- Section 4: Lot 8 (NW4NW4), SW4SW4 - 81.08 acres
- Section 5: Lots 5-8, S2N2, S2 (ALL) - 644.48 acres
- Section 6: Lots 8 & 9, S2NE4, SE4, E2SW4, Lots 13 & 14 (That portion lying south of US 89) - 488.52 acres
- Section 7: N2NE4, NE4NW4 (That portion lying north of US 89) - 32.40 acres
- Section 8: N2N2 (That portion lying north of US 89) - 120.00 acres

GLEN CANYON WEST SOLAR PROJECTS

Township 43 South, Range 1 East:

- Section 3: S2 (That portion lying south of US 89) – 272.48 acres
- Section 4: Lots 1-4, S2N2, S2 (ALL) – 640 acres
- Section 5: Lots 1-4, S2N2, S2 (ALL) – 640 acres
- Section 6: Lots 1 & 2, S2NE4, E2SE4, E2E2E2W2SE4 (That portion lying south of US 89) – 195.16 acres
- Section 8: All- 640 acres

- Section 10: All – 640 acres
- Section 17: Lots 1 through 6, SW4NE4, NW4SE4 – 329.92 acres

GLEN CANYON WEST SUBSTATION

Township 43 South, Range 1 East:

- Section 29: E2E2SE4NW4, W2W2SW4NE4, NW4NW4NW4SE4 – 22.50 acres

By this letter, we hereby give consent and approval to sPower to act on our behalf as our agent to proceed with a CUP Application for the property referenced herein.

If you have any questions or need additional information please contact my office.

Sincerely,

[redacted]

Louis Brown

Deputy Assistant Director Surface

LB;cao

It is hereby certified that the information contained herein is true, complete, and correct to the best of my (our) knowledge and belief and is supplied in good faith, and that the signing agent has legal authority.

On this 18th day of May, 2016 personally appeared before me Louis Brown, signer(s) of the above instrument, who duly acknowledged to me that he/she/they executed the same.

Given under my hand and seal this 18th day of May, 2016.

[redacted]

Notary Public
Residing in: Sevier, Utah
My Commission Expires: 4/07/2020

CARRIE ANN OLVERA
Notary Public
State of Utah
My Commission Expires 01/07/2020
COMMISSION NUMBER 686700

S·POWER
SUSTAINABLE POWER GROUP

To whom it may concern, *July 3, 2014*

I hereby certify that Garret Bean is an authorized representative of the Sustainable Power Group, LLC (sPower). Garret Bean is the Director of permitting and has the authority to perform policy or decision-making functions as it may relate to permitting, entitlements, and the development of sPower solar projects.

X[redacted]

Ryan Creamer, CEO

2749 E. Parley's Way, Suite 310, Salt Lake City, UT 84109 P 801.679.3500 | F 801.679.3501 www.sPower.com

IN WITNESS WHEREOF, the parties hereto have executed this Lease to be effective as of November 1, 2014.

LESSOR:

STATE OF UTAH, SCHOOL AND INSTITUTIONAL TRUST LANDS ADMINISTRATION

Approved as to Form
Sean D. Reyes
ATTORNEY GENERAL
By: [redacted]

[redacted]

By Kevin S. Carter, Director

LESSEE:

Sustainable Power Group (sPower)

[redacted]

By: Ryan Creamer CEO

IN WITNESS WHEREOF, the Lessor and Lessee have caused this Amendment No. 1 to Special Use Lease Agreement No. 1793 to be executed effective as of November 1, 2015.

LESSOR: STATE OF UTAH
School and Institutional Trust Lands Administration
675 East 500 South, Suite 500
Salt Lake City, Utah 84102

By:_____
David Ure, Director

LESSEE: Sustainable Power Group
2180 South 1300 East, Suite 600
Salt Lake City, Utah 84106
[redacted]

By: _____
Name: Ryan Creamer
Title: Authorized Person

APPROVED AS TO FORM:
SEAN D. REYES
UTAH ATTORNEY GENERAL

By: [redacted]
Special Assistant Attorney General

STATE OF UTAH)
: §
COUNTY OF SALT LAKE)

The foregoing instrument was acknowledged before me this __ day of _____. 2016, by David Ure, in his capacity as Director of the School and Institutional Trust Lands Administration.

_____
Notary Public

STATE OF Utah)
: §
COUNTY OF Salt Lake)

The foregoing instrument was acknowledged before me this 6th day of May. 2016 by Ryan Creamer, in his/her capacity as Authorized Person of the Lessee.

[redacted]
Notary Public

ROBYN CLAYTON
NOTARY PUBLIC-STATE OF UTAH
COMMISSION# 664195
COMM. EXP. 02-28-2017

EXHIBIT "C"

Exhibit C1: Site Plan

PROJECT NAME:
GLEN CANYON WEST C

PROJECT SPECS:
555,552 JINKO JKM315P-72 MODULES
174.999 MW(DC)
140 ADVANCED ENERGY AE1000NX INVERTERS
140 MW (AC)
NEXTRACKER SPT SINGLE AXIS
TRACKING SYSTEM

PROJECT SITE ACREAGE:
900± ACRES

APPLICANT NAME:
SUSTAINABLE POWER GROUP
2180 SOUTH 1300 EAST, SUITE 600
SALT LAKE CITY, UT 84106

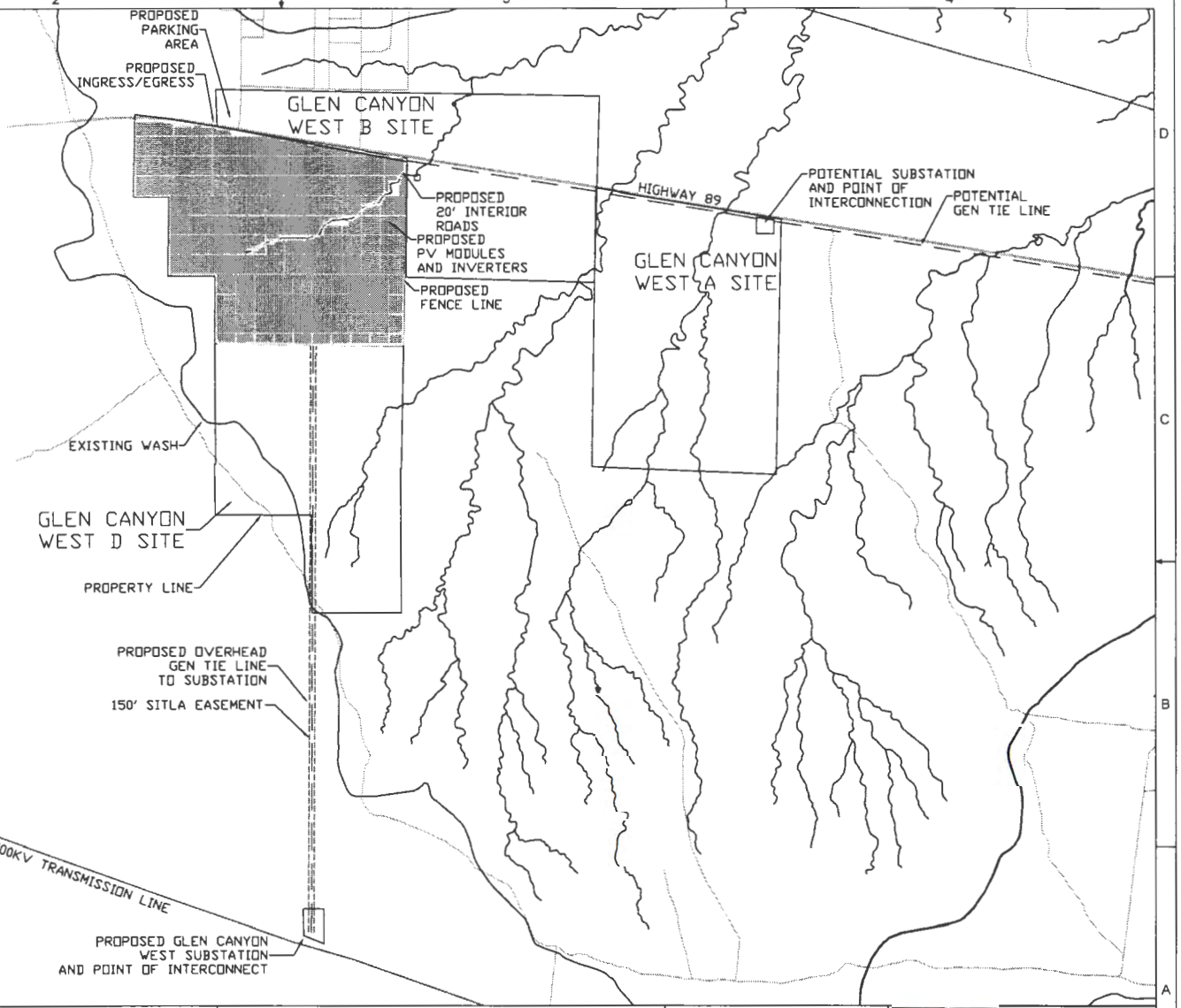

SUSTAINABLE POWER GROUP, LLC
2180 SOUTH 1300 EAST, SUITE 600
SALT LAKE CITY, UTAH 84106

S·POWER
SUSTAINABLE POWER GROUP

DRAWING			
VER	DATE	DESCRIPTION	BY

GLEN CANYON WEST C (CONFIDENTIAL)

SITE PLAN
SCALE: 1" = 250'

CONDITIONAL USE PERMIT APPLICATION

EXHIBIT C1

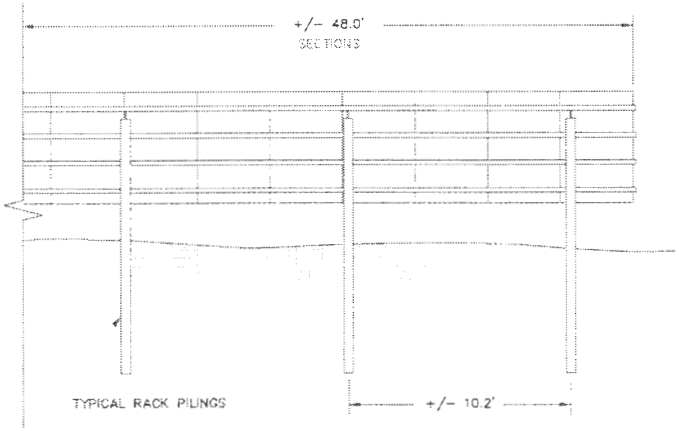

SOLAR ARRAY RACK DETAIL
N.T.S.

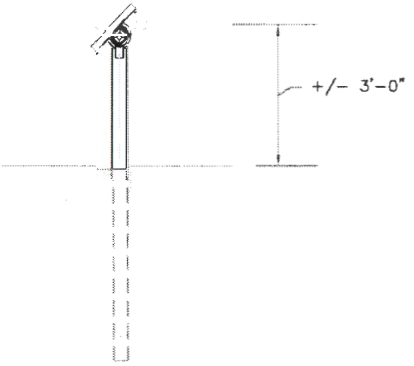

TRACKER RACK AND FOUNDATION DETAIL
N.T.S.

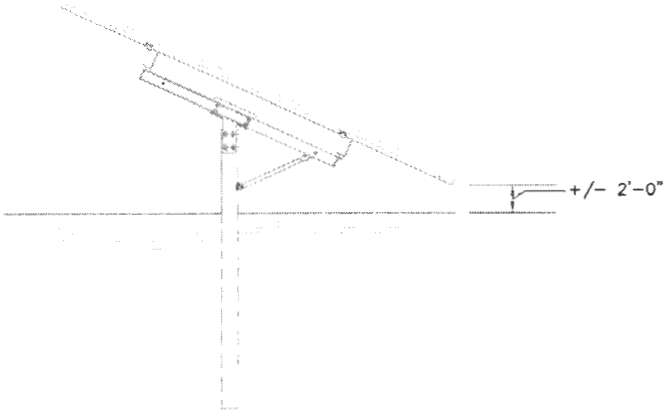

FIXED TILT RACK AND FOUNDATION DETAIL
N.T.S.

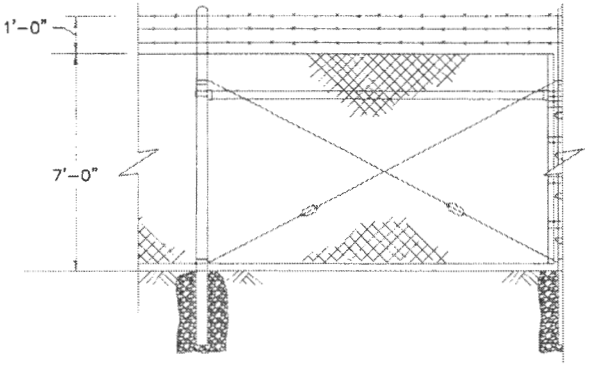

CHAIN LINK SECURITY FENCE
N.T.S.

SUSTAINABLE POWER GROUP, LLC
2180 SOUTH 1300 EAST, SUITE 600
SALT LAKE CITY, UTAH 84106

S·POWER
SUSTAINABLE POWER GROUP

VER	DATE	DRAWING DESCRIPTION	BY

GLEN CANYON
WEST C
(CONFIDENTIAL)

DETAILS PLAN
SCALE: NTS

CONDITIONAL USE PERMIT APPLICATION

EXHIBIT C1

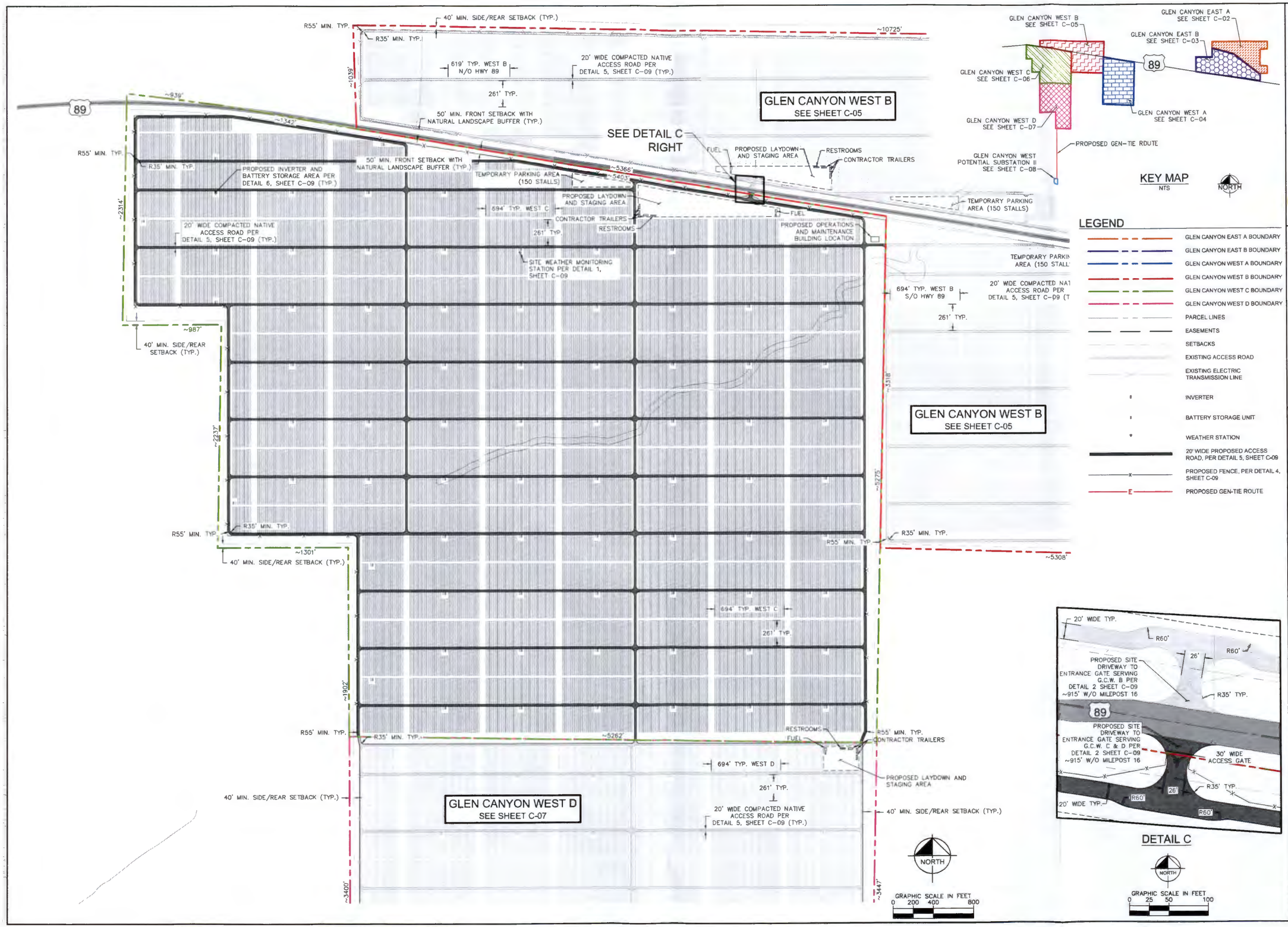

S·POWER
SUSTAINABLE POWER GROUP
5020 EAST SPRING ST.
SUITE 130
LONG BEACH, CA 90815

Kimley»Horn
© 2015 KIMLEY-HORN AND ASSOCIATES, INC.
765 THE CITY DRIVE, SUITE 200, ORANGE, CA 92868
PHONE: 714-939-1030 FAX: 714-938-9488
WWW.KIMLEY-HORN.COM

NOT FOR CONSTRUCTION
DATE 7/25/16

KHA PROJECT 094817008
DATE 7/25/16
SCALE AS SHOWN
DESIGNED BY JWH/MHC
DRAWN BY JWH/MHC
CHECKED BY JBC

ENLARGED GLEN CANYON WEST C 140 MW AC

GLEN CANYON SOLAR
KANE COUNTY, UTAH

SHEET NUMBER
C-06